evoMAX 960DP

Controller for combination boilers for lump wood and pellets

eSTER40R *
eSTER40P *

eSTER80R *

eSTER90P TOUCH *

evoNET *

* not included

OPERATING AND INSTALLATION INSTRUCTIONS FOR THE CONTROLLER

VERSION OF THE PROGRAM:	Panel	v. 4.20.20
	Module A	v. 4.11.24C1
	evoLAMBDA	v. 0.1.10

Table of Contents

1 Security 5
2 General information....7
3 Information regarding documentation 8
3.1 Important notice: Change to product names 8
4 Preservation of documentation 9
5 Symbols used 9
6 Directive 2012/19/EU of the European Parliament and of the Council on waste electrical and electronic equipment 9
End user operating instructions.... 10
7 Structure of the user menu.... 11
8 Controller control.... 12
8.1 Main screen.... 12
8.2 Switching the controller on/off.... 13
8.3 Select WOOD GASIFICATION / PELLET BURNER mode 14
9 Operating modes when selecting the WOOD GASIFICATION mode.... 14
9.1 STOP mode.... 14
9.2 FIRE UP mode.... 14
9.3 OPERATION mode 15
9.4 OVERHEAT mode 15
9.5 FIRE-UP REFILL mode 15
10 Boiler settings when selecting the WOOD GASIFICATION mode.... 16
10.1 Preset boiler output.... 16
10.2 Maximum boiler temperature 16
10.3 Auto embers maintenance 17
10.4 Hot embers layer size.... 17
10.5 Door sensor.... 17
10.6 Calibrating the lambda sensor 18
11 Methods of detecting fuel shortage when selecting the WOOD GASIFICATION.... 18
11.1 Detection mechanism for the hot embers layer.... 18
11.2 Flue gas temperature.... 18
12 Operating modes when selecting the PELLET BURNER mode 19
12.1 FIRE UP mode.... 19
12.2 OPERATION mode.... 19
12.3 SUPERVISION mode 19
12.4 BURNING OFF mode 20
12.5 CLEANING mode 20
12.6 STOP mode.... 21
13 Boiler settings when selecting the PELLET BURNER mode 21
13.1 Automatic activation of the pellet burner 21
13.2 Start of the burner delay.... 21
13.3 WOOD GASIFICATION/PELLET BURNER mode.... 21
13.4 Burner output 22
13.5 Fuel feeder calibration.... 22
13.6 Fuel level 23
13.7 Rotary burner cleaning 24
13.8 Burner operation with schedule 24
14 HUW settings 24
14.1 HUW preset temperature 24
14.2 HUW pump mode 25
14.3 HUW cont. hysteresis.... 25
14.4 Disinfection of the HUW tank 25
14.5 Nigth time decrease HUW 25

14.6 Schedule for HUW circulation ... 26
15 Summer/Winter mode ... 26
16 Mixer 1-4 settings ... 26
16.1 Mixer setting without outdoor temperature sensor (constant temperature) ... 27
16.2 Mixer setup with outdoor temperature sensor without room panel eSTER ... 27
16.3 Mixer setup with outdoor temperature sensor and eSTER room panel ... 27
16.4 Equithermal regulation ... 28
16.4.1 Equitherm curve setting ... 28
16.5 Lowering the Mixer temperature ... 29
17 Information ... 29
18 Favourites menu ... 29
19 General settings ... 29
20 Notice ... 31
20.1 Hot buffer refill point ... 31
20.2 Maximum boiler temperature exceeded ... 31
20.3 Preview ... 31
20.4 Auto embers maintenance ... 31
20.5 No fuel from flue gas temperature ... 31
21 Alarms ... 32
21.1 Flue gas temperature sensor damage ... 32
21.2 Boiler temperature sensor damage ... 32
21.3 Loss of communication ... 32
21.4 Boiler overheating, open contact of emergency thermostat STB ... 32
22 Other features ... 32
22.1 Maintenance ... 32
22.2 Power failure ... 32
22.3 Protection against freezing ... 33
22.4 Protection of pumps and mixers against freezing ... 33
22.5 Solar ... 33
22.6 Ventilation flap ... 34
22.7 Hot-air unit ... 34
23 Replacing the mains fuse ... 36
24 Room panel eSTER ... 36
25 Internet module evoNET ... 36
Instructions for service organisations installing and commissioning the boiler ... 37
26 Technical data ... 38
27 Conditions for storage and transport ... 39
28 Replacing the control panel ... 39
29 Wiring the electrical installation ... 39
29.1 Preparing the cabling ... 40
29.2 Wiring the P module ... 41
30 Electrical wiring diagrams of the boiler ... 42
30.1 Electrical diagram of the controller control panel ... 42
30.2 Electrical wiring diagram of the exhaust fan R2E180-CG82-05 ... 42
30.3 Wiring diagram of lambda sensor and stepper motor ... 43
30.4 Electrical wiring diagram of the door switch and fuel detection mechanism sensor ... 43
30.5 Electrical diagram of the burner and fuel feeder ... 44
31 Connecting temperature sensors ... 45
31.1 Connecting water temperature sensors ... 45
31.2 Connecting the flue gas temperature sensor ... 46
31.3 Connecting an outdoor temperature sensor ... 47
31.4 Wiring diagram for external temperature sensors ... 47
31.5 Checking temperature sensors ... 49
32 Connecting other devices to the controller ... 50

32.1 Boiler and HUW pump connection ... 50
32.2 Connection of mixing valves (Mixers) ... 50
32.3 Connecting and setting up a room thermostat ... 51
32.4 Connecting the eSTER room panel ... 51
32.5 Connection of reserve boiler via output H ... 53
32.6 Connection of alarm signalling via output H ... 55
32.7 Circulation pump connection ... 56
32.8 Connecting the STB emergency thermostat ... 56
32.9 Solar connection ... 56
32.10 Connection of the air supply ventilation flap to the boiler room ... 57
32.11 Connecting other peripherals ... 57
33 Service settings ... 59
33.1 Structure of the service menu ... 59
33.2 Description of service parameters ... 61
33.2.1 Burner auto activation ... 61
33.2.2 Wood Gasification settings ... 61
33.2.3 Burner settings ... 61
33.2.4 Boiler settings ... 64
33.2.5 Boiler pump and HUW settings ... 64
33.2.6 Buffer settings ... 65
33.2.7 Mixer 1-4 settings ... 66
33.2.8 Solar ... 67
33.2.9 Output H ... 68
33.2.10 Manual control ... 68
33.2.11 Ventilation flap activate ... 68
33.2.12 Restore defaults settings ... 68
33.2.13 Service disabling ... 68
33.2.14 Show advanced setup ... 68
33.2.15 Log out of the service mode ... 68
34 Replacement of spare parts and components ... 68
35 Description of possible malfunctions ... 69
36 Notes ... 70

1 Security

Safety-related requirements are specified in the individual sections of this manual. In addition, the following instructions must be followed:

- The controller may only be used in accordance with these instructions.
- Before starting to install or repair the controller or before carrying out any connection work, it is absolutely necessary to disconnect the mains power supply and make sure that no terminals and electrical wires are live.
- There is also a risk of electric shock from the connected standby boiler (if controlled by the evoMAX 960DP controller). In addition to disconnecting the controller from the mains, it is also necessary to disconnect the standby boiler from the mains supply.
- It is necessary to use additional safety features when installing the boiler, heating circuits and domestic hot water (HUW) cylinder to protect against the possible consequences of controller malfunctions or software errors.
- Select the values of the set parameters accordingly to the boiler and fuel type, keeping in mind all operating conditions of the system. Incorrect selection of values may cause an emergency condition of the boiler (e.g. overheating, etc.) or the heating system.
- The controller is not an intrinsically safe device. This means that in the event of a malfunction, it can be a source of sparks or high temperatures that can cause a fire or explosion in an environment of dust and combustible gases. Therefore, the controller should be separated from dust and combustible gases by suitable covering.
- The controller must be installed in accordance with applicable standards and regulations.
- Only a person familiar with this manual may make changes to the controller settings.
- The controller may only be used in heating systems that have been designed and constructed in accordance with the applicable regulations.
- The electrical installation in which the controller operates must be three-wire and fused to the loads used.
- The controller must not used with damaged housing or electrical wires. It is necessary to check the condition of the wiring and in case of damage to the wiring take the controller out of service.
- Electrical wiring, especially mains wiring, must not touch or be near hot objects. It must also not be mechanically loaded.
- The controller cannot be subject to vibration or be exposed to direct sunlight.
- It is forbidden to remove the cover and pull out the controller module, as there is a risk of electric shock.
- It is forbidden to insert any foreign objects into the controller cabinet.

- It is necessary to protect the controller from water and dust.
- The controller can be used indoors.
- Before connecting any peripheral devices, the mains power must be switched off.
- Under no circumstances shall any modifications be made to the controller design.
- Children must be prevented from accessing the controller and its accessories.
- The manufacturer accepts no liability for damage caused by failure to follow these instructions.

2 General information

The evoMAX 960DP boiler controller is an electronic device designed to control a solid fuel boiler and heating system.
The main controller module has the following inputs and outputs:

- **Digital inputs**
  - STB emergency thermostat
  - Door sensor
  - Ember layer sensor
  - Fuel level sensor
  - Room thermostat
- **Analog inputs**
  - Boiler temperature sensor
  - Return temperature sensor
  - Flue gas temperature sensor
  - Buffer tank temperature sensor - upper
  - Buffer tank temperature sensor - medium
  - Buffer tank temperature sensor - bottom
  - Mixer temperature sensor 1
  - Mixer temperature sensor 2
  - Hot water temperature sensor
  - Outdoor temperature sensor
  - Burner temperature sensor
  - Solarium temperature sensor
  - Room panel
  - Hall probe
  - Lambda probe
  - Optical sensor
- **Digital outputs**
  - Boiler pump
  - Mixer pump 1
  - Mixer pump 2
  - HUW tank pump
  - HUW circulation pump
  - Output H (reserve boiler, alarm signalling)
  - Ignition
  - Feeder 1 (from tray)
  - Feeder 2 (in burner)
  - Burner pressure fan
  - Rotary burner cleaning drive
  - Exchanger cleaning drive
  - Burner damper solenoid
- **Analog outputs**
  - Exhaust fan
  - Stepper motor drive
  - PWM storage tank pump
  - PWM solar collector pump
  - Mixer drive 1
  - Mixer drive 2

The device is operated in a simple, intuitive way using the touch screen. It is an equitherm controller, i.e. the temperature of the mixed heating circuits can be automatically regulated based on the outside temperature.

The controller has a modular layout. It consists of:

- the main module
- control panel (touch screen)
- module P - for variants of combined boiler for wood and pellet combustion, for connecting solar panels, for connecting the air supply ventilation flap to the boiler room
- module C (optional) - for controlling two more heating circuits

The device can work with classic room thermostats to ensure a constant comfortable temperature in heated rooms.
It can also work eSTERxxP (wired) or eSTER (wireless) room panels, which installed in heated rooms and serve as room thermostats and remote control of the boiler controller. It also allows remote on-line operation and control of the controller via the evoNET300 internet module.
In addition, it is also capable of controlling a backup heat source (e.g. a gas boiler) and the operation of solar collectors.
The controller can be used in households or smaller industrial buildings.

3 Information regarding documentation

As this controller manual is only a supplement to boiler manual, it is therefore necessary (in addition to the instructions in this manual) to follow the boiler manual!
For ease of use, the manual is divided into 2 parts:

- for operation by the end user
- for service organisations carrying out the installation and start-up of the boiler.

All sections contain important information affecting the safety of boiler operation. Therefore, both the user of the controller and the technician performing the installation must read all parts of the manual.

The manufacturer accepts no liability for damage caused by failure to follow these instructions.

3.1 Important notice: Change to product names

In accordance with the requirements of European directives and updated regulations, the trade names of the following products will change with effect from 1 September 2026:

Original name:	**ecoMAX**	**ecoSTERxx**	**eSTERxx**	**ecoNET**
New name:	**evoMAX**	**eSTERxxP**	**eSTERxxR**	**evoNET**

This change relates exclusively to trade names and designations in the documentation. Their purpose, design, technical specifications, software, wiring and operation remain entirely unchanged.

During the transition period, the original names may continue to appear in existing technical documentation, sales and marketing materials, on labels, product labels, in manuals and other documents relating to equipment manufactured prior to the date mentioned above. The new names are already in use for new products, materials and technical documentation.

4 Preservation of documentation

Please keep this installation and operating manual, as well as any other binding documentation, carefully so that it can be used whenever necessary. In the event of moving or selling the equipment, all enclosed documentation must be handed over to the new user/owner.

5 Symbols used

The following graphic symbols are used in the instructions:

- a symbol highlighting useful information and tips

- A symbol that draws attention to important information on which damage to property, health and life of people and pets may depend.

ATTENTION!
The symbols indicate essential information to simplify familiarisation with the manual. However, this does not relieve the user from the obligation to read and follow the instructions not marked graphic symbols.

6 Directive 2012/19/EU of the European Parliament and of the Council on waste electrical and electronic equipment

- Recycle the packaging and the product at the end of its useful life at an appropriate recycling company.
- Do not dispose of the product in a bin shared with municipal waste.
- Do not burn the product.

End user operating instructions

For BLAZE gasifying boilers equipped with the evoMAX 960DP controller (except for the BLAZE PRAKTIK series boilers) it is mandatory to install a storage tank in the heating system!

For more information on the minimum volume and conditions for installing the storage tank in the heating system, please refer to the boiler operating and installation instructions.

7 Structure of the user menu

Information
Boiler settings

- Maximum boiler water temperature
- Preset boiler output
- Wood gasification output
    - Auto embers maintanence
    - Hot ember layer size
    - Door sensor activation
- Pellet output modulation
    - Work mode
    - MAX boiler output
    - MAX fan output
    - MED boiler output
    - MED fan output
    - MIN boiler output
    - MIN fan output
    - Boiler hysteresis
    - Minimal boiler output FL
    - Maximal boiler output FL
    - Feeder
        - Feeder
        - Feeder efficiency test
        - Feeder Gasification
        - Fuel weight
- Alarm level
    - Alarm level
    - Fuel level calibration
- Cleaning
    - Rotary cleaning cycle
    - Burner cleaning
    - Cleaning intensity
- Lambda calibration

HUW settings [1)]

- HUW preset temperature
- HUW pump mode
- HUW cont. hysteresis
- Disinfection of the HUW tank
- Night time decrease HUW
    - On/Off
    - Decrease
    - Schedule
- Schedule for HUW circulation
    - On/Off
    - Schedule

Summer/Winter [1)]

- SUMMER mode
- SUMMER mode act. temperature
- SUMMER mode deact. temperature

Mixer 1-4 settings [1)]

- Preset mixer 1-4 temperature
- Room termostat Mixer 1-4
- Mixer 1-4 weather control
- Heating curve. Mixer 1-4
- Curve shift 1-4
- Mixer 1-4 night time decrease
    - On/Off
    - Decrease
    - Schedule

Burner operation with schedule

- On/Off
- Schedule

General settings

- Clock
- Date
- Brightness
- Sound
- Language
- Software update
- Weather temperature correction

Alarms

Turn on/off the controller

Service Settings

[1)] This setting is not displayed if the corresponding sensor, expansion module or parameter is not connected or is hidden.

8 Controller control

All settings of the controller are made via the capacitive touch screen mounted on the upper door of the boiler.

8.1 Main screen

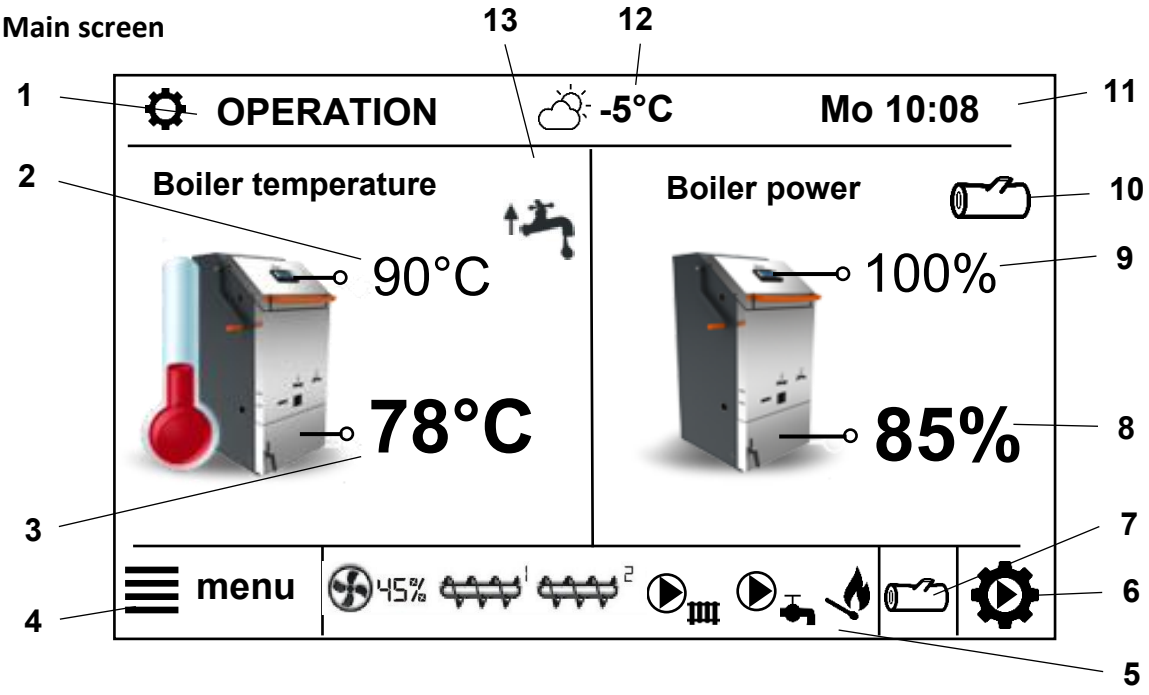

Figure 1. Main screen of the controller

Legend:

1. Controller operating modes: FIRE UP, OPERATION, PREVIEW, FIRE-UP REFILL, OVERHEAT, IGNITION, SUPERVISION, BURNING OFF, CLEANING, STOP, TURNED OFF
2. Maximum boiler water temperature value - longer holding of the finger allows to change the value
3. Current boiler temperature value
4. Enter the main (user) menu
5. Information field of operation of individual outputs

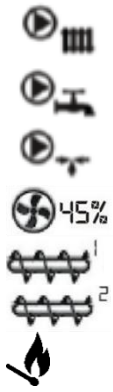

Boiler pump

HUW pump

Mixer pump

Exhaust fan and its performance

Feeder 1 (from tray)

Feeder 2 (in burner)

Ignition

6. Enter the wood gasification mode menu (OPERATION / STOP)
7. Manual switching between WOOD GASIFICATION and PELET BURNER modes
8. Current boiler output value
9. Boiler power setpoint value - holding your finger longer will change the value

10. Indication of the fuel detection mechanism status - see chapter 11.1
11. Current time and day of the week
12. Current outdoor temperature
13. Information field of functions affecting the desired boiler temperature. Meaning of individual symbols:

	the room thermostat contacts are open, the desired room temperature has been reached
	Reduction of the boiler setpoint temperature due to active timing
	increase of the boiler temperature due to charging of the hot water tank (HUW)
	increase of the boiler temperature due to heating of the mixed heating circuit
	increase of the boiler temperature due to charging of the storage tank

The right and left windows of the main screen can display different information. By touching it, you can change the displayed information regarding the boiler, storage tank, mixed heating circuits, HUW, oxygen, counters, etc.
This information can also be displayed on the eSTER room panel.

8.2 Switching the controller on/off

When connected to the mains (~ 230V/50 Hz) the controller is in STAND BY power saving mode. The display shows the current time, date, outside temperature and the text "***Boiler off***". Touching anywhere on the screen will bring up the text "***Boiler on?***" and selecting ✓ will turn the controller on.

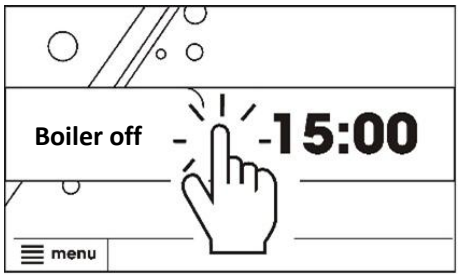

Figure 2. Switching on the boiler

From this moment on the hydraulic part of the installation (pumps, Mixers) works according to the set requirements, the boiler is in STOP mode.

There is a second way to switch on the boiler. You need to press the MENU button and then search in the rotating menu and select the button. The text "***Switch on the boiler?***" will appear and selecting ✓ will switch on the boiler.

To switch off the boiler and thus also switch off the hydraulic part of the installation, enter MENU and press the icon . The text "***Switch off the boiler?***" will appear. and selecting ✓ will switch the controller to STAND BY mode.

Do not switch off the controller when the boiler is in operation. There is a risk of overheating the boiler. Switching off the controller will also stop the control of the hydraulic part of the heating system.

8.3 Select WOOD GASIFICATION / PELLET BURNER mode

After switching on the regulator, the WOOD GASIFICATION mode is always active, i.e. the possibility of burning lump wood. If you need to manually change the mode to pellet burning, press the wood log icon in the bottom right corner of the main screen (position 7 in Figure 1) and select the PELLET BURNER mode.

Switching the boiler from the WOOD GASIFICATION mode to the PELLET BURNER mode is not possible during wood burning. The controller must be in STOP mode.

If the option is activated:

Menu → Boiler settings → Pellet output modulation → Auto pellet burner activation → ON

the automatic start-up of the pellet burner after burning out of the lump wood, based on the parameters *Start of the burner delay* and *Loading start temperature* (temperature in the upper part of the accumulation vessel).

9 Operating modes when selecting the WOOD GASIFICATION mode

9.1 STOP mode

After switching on, the controller is in STOP mode. During boiler operation, it is possible to switch to STOP mode at any time by touching the gear icon in the bottom right corner of the main controller screen and selecting STOP mode. The STOP mode takes the boiler (exhaust fan) out of operation. The hydraulic part of the installation (pumps, Mixers) continues to operate according to the set parameters.

It is not recommended to manually switch to STOP mode during boiler operation. This can lead to tarring and reduced boiler life.

9.2 FIRE UP mode

This mode is used for proper ignition of the fuel in the boiler. When the handle of the upper door is raised, the door switch sends a signal to the controller and it activates the FIRE UP mode. The ignition process is automatic. For this mode it is possible to set the fan power with the service parameter *Firing up exhaust fan power.* When the flue gas temperature exceeds 100°C, the controller switches to the OPERATION mode.

If the door switch function is switched off in:

Menu → Boiler settings → Wood gasification output → Door sensor activation → OFF

the FIRE UP mode can be activated by touching the gear icon in the bottom right corner of the screen and selecting OPERATION mode.

The FIRE UP mode is activated automatically when selecting the OPERATION or REFILL mode if the flue gas temperature of 100°C is not reached.

If the feed door is open for 5 min, the switch from the REFILL mode to the OPERATION mode (depending on the flue gas temperature) will occur and the display will show "CAUTION! The boiler door open!" with an audible signal. This is a safety warning for the user.

9.3 OPERATION mode

The OPERATION mode is activated automatically when the flue gas temperature reaches 100°C during the FIRE UP mode. In OPERATION mode the boiler operates according to the set values of individual parameters. In the OPERATION mode, the controller modulates the exhaust fan speed to maintain the set boiler output.

9.4 OVERHEAT mode

If the value of the parameter *Max. Preset boiler temperature* (service setting) is exceeded, the controller switches to the OVERHEAT mode and informs the user by a short sound signal and information on the display. In the OVERHEAT mode, the exhaust fan is switched off, while the hydraulic part of the installation works according to the set parameters. When the boiler temperature drops by 5°C, the controller automatically switches to the OPERATION mode, but the overheating information remains on the display. This is done so that the user is informed about the boiler overheating even after switching back to OPERATION mode.

Frequent overheating of the boiler leads to frequent shutdowns, which reduces the boiler's service life.

The boiler residence times in the OVERHEAT mode are cumulative. The total time is stored in the controller memory. The number of hours spent in OVERHEAT mode affects the boiler warranty.

9.5 FIRE-UP REFILL mode

When adding fuel to the boiler it is necessary to use the FIRE-UP REFILL mode. When the handle of the upper door is raised, the door switch sends a signal to the controller and it activates the FIRE-UP REFILL mode.
The exhaust fan will start to run at 100% power to ensure that the flue gases are sufficiently exhausted into the chimney to prevent smoke from escaping into the boiler room. After lifting the handle, wait a few seconds for the

fan to run at 100% power. Then slowly open the upper door by about 5 cm and again wait a few seconds for the fan to extract any wood gas from the feeding chamber. After ensuring that there is no thick smoke in the feed chamber and that it cannot ignite rapidly, open the door fully and add fuel.
The controller automatically switches the boiler back to the OPERATION mode FIRE UP mode (if the flue gas temperature has dropped below 100°C) after closing the handle of the upper door or after the time specified by the parameter *Max. refill time*.

If the door switch function is switched off in:

Menu→ Boiler settings→ Wood gasification output→ Door sensoractivation→ OFF

the REFILL mode can be activated by pressing the gear icon in the bottom right corner of the screen and selecting REFILL mode.

When adding fuel, it is essential to follow the instructions in the boiler operating and installation manual.

10 Boiler settings when selecting the WOOD GASIFICATION mode

10.1 Preset boiler output

The controller can modulate the boiler output from 30 - 50% (depending on the boiler type) to 100% of the rated output. This is set in:

Menu→ Boiler settings→ Preset boiler output

Setting a low boiler output may result in the boiler water temperature not approaching the value set in the "Maximum boiler temperature" parameter.
The controller primarily maintains the desired boiler output and this can be automatically adjusted if the boiler water temperature approaches the value of the "Maximum boiler temperature" parameter.

The setting of the *Preset boiler output* parameter can also be done by holding your finger on the set power value on the main screen - see Figure 3.

Figure 3. Changing the desired boiler output from the main screen

10.2 Maximum boiler temperature

This parameter is set in:

Menu → Boiler settings→ Maximum boiler temperature

The set maximum temperature of the boiler can be automatically adjusted according to the needs of the controller: if it is too low, it is automatically increased to heat the HUW tank and provide the desired Mixer temperature for all heating circuits.

You can also set the *Maximum Boiler Temperature* parameter by holding your finger on the set temperature value on the main screen - see Figure 4.

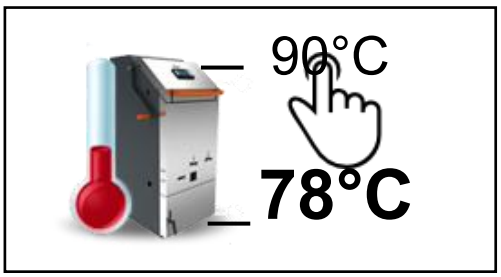

Figure 4. Changing the maximum boiler temperature from the main screen

10.3 Auto embers maintenance

It is activated in:

Menu→ Boiler settings →Wood gasification output→Auto embers maintanance

Turning this function on activates the possibility of maintaining a hot fuel layer at the bottom of the feed chamber by means of the fuel detection mechanism, thus significantly reducing the number of new meltdowns in the boiler.

This function is activated only after the time specified by the parameter has elapsed:

Service Settings→ Wood Gasification settings→ Minimal OPERATION time

The default setting of the *Minimal OPERATION time* parameter is 30 min.

10.4 Hot embers layer size

It is set in:

Menu→ Boiler settings→ Wood gasification output →Hot embers layer size

If the hot embers layer size is set to 100%, the controller will shut down the boiler to staging as soon as a fuel shortage is detected. If the staging bed size is set to a lower value (90 - 10%), the boiler continues in OPERATION mode for a period of time to allow some of the residual fuel to burn off and the staging bed to reach the desired size. During this burn-in, the wood log symbol (position 10 in Figure 1) flashes.

10.5 Door sensor

It is activated in:

Menu→ Boiler settings→ Wood gasification output →Door sensor activation

The function of the boiler top door switch can be switched on/off in this menu. For a description of the function of the door switch - see chapters 9.2 and 9.5.

10.6 Calibrating the lambda sensor

If the boiler is equipped with a lambda probe and it is obviously showing an incorrect oxygen value on the display (for a boiler extinguished on fresh air this value is 21% with a tolerance of ±2%), calibrate it.
This is done as follows:

- The boiler must be completely extinguished, cooled and cleaned of ash.
- The controller must be in STAND BY mode.
- On the controller, select: ***Menu→ Boiler settings→ Lambda calibration***
- The exhaust fan will start and the display will show "***Lambda sensor calibration in progress***".
- Calibration can take up to 10 min and is completed by putting the controller back into STAND BY mode.

11 Methods of detecting fuel shortage when selecting the WOOD GASIFICATION

11.1 Detection mechanism for the hot embers layer

When the fuel level in the feed chamber drops below the detection threshold, the controller goes into STOP mode and the main control panel screen displays the wood log in red along with information about the fan shutdown by the detection mechanism. Returning to the OPERATE mode requires user intervention and fuel application.

The boiler is equipped with a "MAINTENANCE RUN" function, which ensures that the base layer stays hot during shutdowns and does not need to be ignited during reheating. This function in STOP mode switches on the exhaust fan at regular intervals. The intensity of the MAINTENANCE RUN can be set in the menu:

Service settings→ Wood gasification settings→ Embers maintenance interval time

For longer downtimes (over 8 h), we do not recommend using this function as it leads to an excessive reduction in the size of the base layer. A sufficient base layer, even if burnt out, is more valuable for a flood than a small layer, even if glowing.

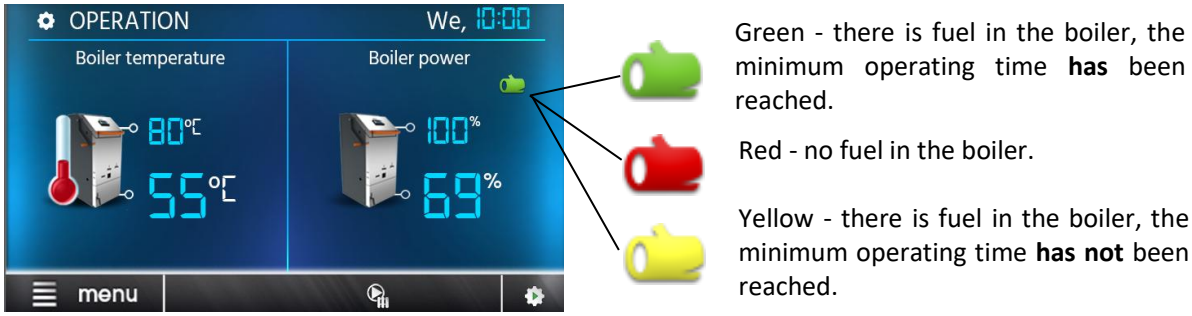

Figure 5. Colour display of fuel signalling

11.2 Flue gas temperature

If the flue gas temperature drops below 90°C and the time given by the service parameter *Minimal OPERATION time* elapses, the controller switches the boiler to STOP mode and the display shows information about shutdown due to low flue gas temperature.
Boiler shutdown by flue gas temperature occurs in case of failure of the fuel shortage detection mechanism or in case the stoker function is deactivated.

In case of incorrect heating in the boiler or if the flue gas temperature rises slowly, the boiler can be switched to STOP mode even if there is enough fuel in the boiler.

12 Operating modes when selecting the PELLET BURNER mode

12.1 FIRE UP mode

FIRE UP mode is used to automatically ignite the pellets in the burner. In the case of an unsuccessful ignition attempt, the attempts are repeated and during these attempts the amount of fuel delivered to the burner (service parameter *Fuel dose*) is reduced to 10% relative to the first attempt. Further ignition attempts are indicated by a number next to the ignition symbol on the display. After three unsuccessful ignition attempts, the alarm " *Unsuccessful boiler firing-up attempt* " is activated. It is not possible to continue heating the boiler and service intervention is required.

12.2 OPERATION mode

During the OPERATION mode the fan runs continuously, the fuel feeder runs in periods (see Figure 6). One period consists of a feeder run time and a feeder pause time.
The feeder run time is calculated automatically depending on the current desired burner output and the set parameters *Feeder efficiency* and *Fuel calorific*.

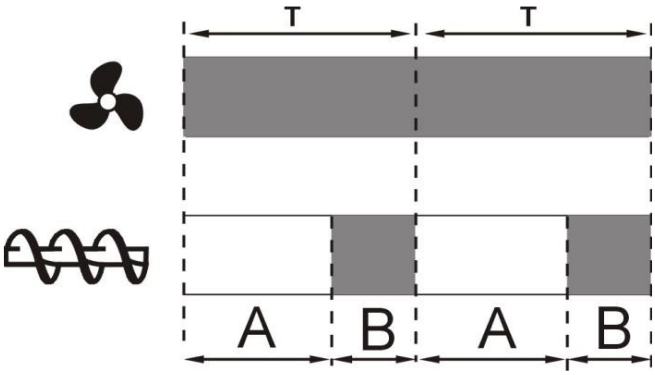

Figure 6. Periods of operation of the fan and feeder, where:

T - feeding cycle time, A - feeder pause time, B - feeder running time

Parameters for setting the burner and fan output at individual boiler output levels (MAX, MED, MIN) are set in:
Menu→ Boiler settings→ Pellet output modulation

12.3 SUPERVISION mode

The controller automatically switches to the SUPERVISION mode without user intervention after exceeding the maximum boiler temperature by 5 °C (the SUPERVISION mode must be enabled in the service menu, i.e. set non-zero value of the parameter *Supervision time*).

In the SUPERVISION mode, the controller ensures that the burner does not burn out. Under these circumstances, the burner operates at a very low output, which, if the parameters are correctly selected, does not cause a further

temperature rise in the boiler. By activating this mode, the phenomenon of frequent extinguishing and re-ignition of the boiler can be reduced. All the parameters affecting the SUPERVISION mode are in the menu:

Menu → Service Settings → Burner settings

The parameter *Supervision time* defines the time for which the boiler can operate in the SUPERVISION mode. If there is no need to resume boiler operation after this time, the controller will start the BURNING OFF mode.

When the parameter Supervision time = is set to 0 min, the controller skips the SUPERVISION mode and goes straight to the BURNING OFF mode.

The parameter *Boiler output in Supervision mode* must be set so that neither the firebox in the burner is extinguished nor the boiler overheats.

The parameters in this mode must be set so that the boiler temperature gradually decreases. Otherwise there is a risk of overheating.

12.4 BURNING OFF mode

In the BURNING OFF mode, the fuel residues are burned off and the boiler prepares to switch to the STOP mode or to switch off completely. All parameters affecting the BURNING OFF process are in the menu:

Menu → Service Settings → Burner settings → BURNING OFF

In this condition, the controller stops the fuel supply, periodically purges the burner and refuels the residual fuel in a controlled manner. When the flame brightness drops below the value given by the service parameter *Blowing stop* or after the time given by the service parameter *Maximum time of burning off* has elapsed, the regulator switches to STOP or OFF mode.

12.5 CLEANING mode

In the CLEANING mode, the burner is cleaned of ash generated during boiler operation. For this purpose it is advisable to use the maximum power of the fan. Parameters affecting the CLEANING process are in the menu:

Menu → Service Settings → Burner settings → CLEANING

Burner cleaning is always performed before activation of the FIRE UP mode (determined by the parameter *Cleaning time FIRE UP*) and after BURNING OFF mode (determined by the parameter *Cleaning time BURNING OFF*).

If the boiler is in OPERATION or SUPERVISION mode for a long time without extinguishing, the burner cleaning function is also activated. This function is automatically activated after the time specified by the parameter has elapsed:

Menu → Boiler settings → Cleaning → Burner cleaning

After this cleaning, the boiler returns to the OPERATION mode via the FIRE UP mode.

12.6 STOP mode

In STOP mode, the boiler is extinguished and waiting for the signal to start operation. This signal can be:

- switching on the eSTER room panel or room thermostat
- the boiler temperature drops below the desired boiler temperature reduced by the *Boiler hysteresis* parameter. This is set in the menu:

  Menu → Boiler settings→ Pellet output modulation → Boiler hysteresis
- when operating the boiler with a storage tank - the upper temperature in the storage tank drops below the *Loading start temperature*. This is set in the menu:

  Menu → Service Settings→ Buffer Settings→ Buffer settings in pellet mode

13 Boiler settings when selecting the PELLET BURNER mode

13.1 Automatic activation of the pellet burner

In order for the user to be able to access the function of automatic start of the pellet burner after burning out of lump wood, it must be activated in the service menu:

Menu →Service Settings→ Burner auto activation→ ON

The user can then activate/deactivate it using the parameter:

Menu → Boiler settings→ Pellet output modulation→ Auto pellet burner activation

The automatic activation is also dependent on the parameters *Start of the burner delay* (see chapter 13.2) and *Loading start temperature* (the temperature in the upper part of the accumulation vessel must fall below this value). They are set in:

Menu→ Boiler settings→ Pellet output modulation →Start of the burner delay

Menu →Service settings→ Buffer Settings→ Buffer settings in pellet mode→ Loading start temperature

13.2 Start of the burner delay

It is set in:

Menu→ Boiler settings→ Pellet output modulation →Start of the burner delay

This function allows you to delay the start of the pellet burner after activating the request for its operation by a set time interval. The maximum delay value is 18 h.

If it is necessary to delay the start of the pellet burner for more than 18 h, the "Burner operation with schedule" can be used.

13.3 WOOD GASIFICATION/PELLET BURNER mode

It is set in:

Menu→ Boiler settings→ Pellet output modulation →Work mode

This is the second way (the first one is via position 7 in Figure 1 and is described in chapter 8.3) to change the WOOD GASIFICATION to the PELLET BURNER mode. This switching is also possible remotely via the evoNET internet module.

Switching the boiler from the WOOD GASIFICATION mode to the PELLET BURNER mode is not possible during wood burning. The controller must be in STOP mode.

13.4 Burner output

The controller is equipped with a modulation program for reducing the burner output - it allows to gradually reduce the burner output as soon as the instantaneous boiler temperature approaches the desired boiler temperature.

Three performance levels are defined:

- MAXIMUM - maximum output
- MEDIUM - medium output
- MINIMUM - minimum output

Each of these power levels is assigned a separate burner power and burner fan power. Parameters for defining the individual burner and burner fan power levels are available in the menu:

Menu→ Boiler settings→ Pellet output modulation

13.5 Fuel feeder calibration

It is carried out in:

Menu→ Boiler settings→ Pellet output modulation →Feeder→ Feeder efficiency test

This is a very important activity. Correct and accurate measurement and setting of the *"Feeder efficiency"* value in the control unit determines the reliability of the boiler operation. Entering the wrong value will cause the boiler to malfunction.

The parameter *Fuel weight* defines the amount of fuel that the feeder is able to deliver to the burner at a given arrangement and inclination in a continuous operation per unit of time (namely 6 min). It must be determined as follows:

1. Check the correct mounting of the screw feeder from the hopper. The angle of inclination between the hopper feeder and the horizontal floor must be between 0 and 45°.

- Installing the feeder at a lower inclination increases the amount of fuel conveyed.
- Installing the feeder at a higher inclination reduces the amount of fuel conveyed.

2. Fill the tank with the prescribed fuel.

3. Connect the boiler to the mains (230V/50Hz) using a cable with a plug.

4. Slide the flexible hose, including the connecting sleeve, out of the upper burner sleeve and place it in a suitable container.

5. Press the **START** button (***Menu→ Boiler settings→ Pellet output modulation →Feeder→ Feeder filling***) to fill the auger feeder from the hopper with fuel. Stop Gasification the screw feeder by pressing the **STOP** button at least 30 s after the pellets start falling from the feeder into the container. Empty the container with the attacked pellets and return it under the disconnected flexible hose.

6. Press the **START** button (***Menu→ Boiler settings→ Pellet output modulation → Feeder→ Feeder efficiency test***) to start the feeder performance test itself. The feeder will start to pour fuel into the vessel and the display will count down the time until the end of the test. After 6 min, the test is automatically terminated.

7. Consider the amount of fuel delivered to the vessel.

8. Enter the detected net weight value in grams into the boiler controller (***Menu→ Boiler settings→ Pellet output modulation → Feeder→ Fuel weight***). This value affects the fuel dosage during boiler operation. A wrong value will cause poor burner performance. Specifying a lower value than the actual value measured in the test will cause more fuel to be fed to the burner during normal boiler operation. Specifying a higher value than the actual value measured in the test will cause less fuel to be fed to the burner during normal boiler operation.

9. Checking the correctness of the set value of the *Feeder Performance* can be done in the user menu (***Menu→ Boiler settings→ Pellet output modulation → Feeder→ Feeder efficiency***), where this data is displayed automatically converted in kg/h.

10. Slide the flexible hose, including the connecting sleeve, back onto the upper burner sleeve.

After the boiler has been in operation for approximately one month, it is recommended that you carry out a repeat (check) measurement of the fuel feeder's efficiency. If there is a deviation from the value originally set on the controller, adjust this parameter.

Calibration of the fuel feeder must be carried out each time before using a new type of pellets or after changing the inclination of the feeder from the hopper.

13.6 Fuel level

It is set in:

Menu→ Boiler settings→ Alarm level

The controller has the function of monitoring the fuel level in the tank without any sensor. However, it is necessary to calibrate the tank, which is done as follows:

- Fill the hopper to the top.
- Enter the *Fuel Level Calibration* menu and confirm the *Fuel Level 100%* option.
- This initiates the tank calibration and the main screen displaying the fuel level shows "CAL".
- During normal boiler operation, allow the tank to nearly empty and then press *Fuel Level 0%*.
- The calibration of the stack is thus complete.

The *Alarm level* parameter is used to set the fuel level at which the controller should alert the operator of a fuel shortage in the tank by a message on the display. Setting the value to OFF makes this function inactive.

Information about the current fuel level, as well as a low fuel level warning, is also displayed on the eSTER room panel.

For proper operation of the fuel level monitoring function during boiler operation the following is required:

- Always fill the fuel tank to the top of the tank
- hold your finger on the fuel level value on the main screen, as shown in Figure 7
- confirm fuel level setting to 100%

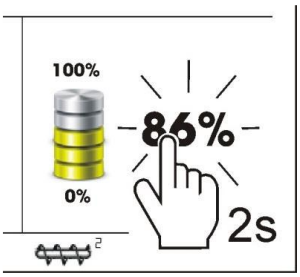

Figure 7. Setting the fuel level to 100%

13.7 Rotary burner cleaning

It is set in:

Menu→ Boiler settings→ Cleaning

The menu allows you to set the burner cleaning parameters by periodically rotating the combustion chamber. The parameter *Rotary cleaning cycle* consists of the rotary cleaning run time and the rotary cleaning pause time. The *Cleaning intensity* parameter determines what proportion of the rotary cleaning cycle time the chamber will rotate.

Example: Rotary cleaning cycle = 100 seconds
Cleaning intensity = 10%
The result is 100 x 0.1 = 10 seconds the burner rotating chamber rotates and 90 seconds it does not rotate

The parameter *Burner cleaning* determines the continuous burner operation time after which the BURNING OFF, CLEANING and restarting modes are automatically activated.

13.8 Burner operation with schedule

In the controller there is a possibility of switching on and off the burner operation at specified time intervals. In cases where there is no heat demand, e.g. in summer, the burner operation can be switched off for a certain period of time, thus reducing the pellet consumption.
It is set in:

Menu→ Burner operation with schedule

The burner on and off operation can be defined separately for each day of the week in the *Schedule* setting.

14 HUW settings

14.1 HUW preset temperature

It is set in:

Menu→ HUW settings→ HUW preset temperature

The menu allows you to set the desired temperature in the hot water tank.

14.2 HUW pump mode

The HUW heating method is set in the menu:

Menu→ HUW settings→ HUW pump mode

The user can select the following functions

- ***Off*** – permanent shutdown of HUW heating
- ***Priority*** – priority of HUW heating over heating circuits. Under this condition, the mixed heating circuits are shut down until the HUW tank is charged to the desired temperature.
- ***No priority*** – simultaneous operation of HUW pump and mixed heating circuits

14.3 HUW cont. hysteresis

It is set in:

Menu→ HUW settings→ HUW cont. hysteresis

This parameter determines the temperature difference (between the actual HUW temperature and the desired HUW temperature) that will trigger the HUW pump to heat the tank.

14.4 Disinfection of the HUW tank

It is set in:

Menu→ HUW settings→ HUW disinfection

The controller has a function of regular automatic heating of the HUW tank to a temperature of 70 °C. This disinfection aims to remove bacteria (Legionella Pneumophila).

Once a week, on Monday at 02:00 a.m., the controller raises the HUW tank temperature to 70 °C. After 10 minutes, the HUW pump switches off and the HUW returns to standard operation.

It is necessary to inform everyone in the building about the activation of this disinfection function. There is a risk of scalding with hot water.

It is not advisable to activate the HUW tank disinfection function if the "HUW pump mode" is set to "Off".

14.5 Nigth time decrease HUW

It is set in:

Menu→ HUW settings→ Night time decrease HUW

Activate the HUW temperature reduction time program by selecting *Yes.* Then select whether you want to set a weekly program for weekdays, Saturday or Sunday. Specify the time intervals at which the desired HUW tank temperature is to be reduced and also the *Decrease* value of temperature.

14.6 Schedule for HUW circulation

It is set in:

Menu→ HUW settings→ Schedule for HUW circulation

It is possible to set up a weekly time program for the circulation pump, where we determine the time intervals at which it should be switched off. The setting is the same as for HUW or Mixer reduction.

The circulation pump will start working when the temperature in the HUW tank reaches the value of the parameter *Temperature circulating pump activation* (in ***Menu→ Service Settings→ Boiler pump and HUW settings***) and will be active for the time set in the parameter *Circulating pump operation time* (in ***Menu→ Service Settings→ Boiler pump and HUW settings***). This is followed by switching off the circulation pump given by the parameter *Circulating pump standstill time* (in ***Menu→ Service Settings→ Boiler pump and HUW settings***).

15 Summer/Winter mode

The SUMMER function allows the heating circuits to be switched off in summer and only the HUW tank heating to be maintained.
It is set in:

Menu → Summer/Winter

The user can select:

- ***Winter*** – permanently select the WINTER mode, i.e. simultaneous heating of the building and HUW.
- ***Summer*** - permanently select the SUMMER mode, i.e. HUW heating only.
- ***Auto*** – set the automatic switching of the SUMMER/WINTER mode depending on the outside temperature. The moment when the switch from one mode to the other and vice versa occurs is then decided by the temperature parameters *SUMMER mode activation temperature* and *SUMMER mode deactivation temperature*.

The SUMMER mode must not be activated with an unconnected or damaged HUW pump.

In the SUMMER mode all heat appliances can be switched off, so it is necessary to ensure that the boiler does not overheat before activating it.

In systems with a storage tank operating in SUMMER mode, DHW heating is handled by a pellet burner: when a DHW heating request is received, the pellet burner activates and heats the DHW tank to the desired temperature. The burner is subsequently shut off once the storage tank temperature (at the upper sensor) rises 10°C above the *HUW preset temperature*.
Under these circumstances, the service parameters *Loading start temperature* and *Loading end temperature* are not taken into account.

16 Mixer 1-4 settings

It is set in:

Menu → Mixer 1-4 settings

The Mixer setting is not available if the mixing valve sensor is not connected or the Mixer operation is disabled in the service setting.

16.1 Mixer setting without outdoor temperature sensor (constant temperature)

Set the desired water temperature in the heating circuit manually using the *Preset mixer 1-4 temperature* parameter, e.g. 50°C. Optimally, this value should be set to maintain the desired room temperature.

After connecting and activating the room thermostat in the menu:

Menu → Service Settings → Mixer 1-4 settings → Thermostat selection

it is possible to set the heating water temperature reduction after reaching the desired temperature in the room by the value given by the parameter:

Menu → Mixer 1-4 settings → Room thermostat mixer 1-4

This value (e.g. 7°C) should be chosen according to experience. The eSTER room panel can be used for this purpose. It is also possible to use a conventional room thermostat. If the thermostat is working correctly, the preset Mixer temperature will be reduced, which, if the *Room thermostat mixer 1-4* parameter is set optimally, will cause the room temperature to stabilise.

16.2 Mixer setup with outdoor temperature sensor without room panel eSTER

The preset Mixer 1-4 temperature can be set automatically depending on the instantaneous outdoor temperature. When the heating curve is set correctly for the building type, the controller automatically adjusts the Mixer temperature so that the temperature in the room remains approximately the same, regardless of the outside temperature. The following settings are required for a given mixed heating circuit:

Menu → Mixer 1-4 settings → Mixer 1-4 weather control → ON

and select a suitable equitherm curve according to chapter 16.4. in the menu:

Menu → Mixer 1-4 settings → Heating curve mixer 1-4

In this configuration, a standard room thermostat can be connected to eliminate inaccuracies in the heating curve if the heating curve value is too high. Under these , the Mixer temperature should be reduced e.g. 2°C. When the thermostat contacts are opened, the Mixer temperature set point will be lowered to help stabilize the room temperature.

16.3 Mixer setup with outdoor temperature sensor and eSTER room panel

For a given mixed heating circuit, you need to set:

Menu → Mixer 1-4 settings → Mixer 1-4 weather control → ON

Thanks to the eSTER room panel, the controller is able to automatically change the temperature in the heating circuit based on the outside temperature and the room temperature.

The eSTER room panel evaluates the value of the heating curve automatically based on the set room temperature. The controller relates the desired temperature to a value of 20°C. For example, for a set room temperature of 22°C, the controller shifts the heating curve by 2°C. For a set room temperature of 18°C, the controller shifts the heating curve by -2°C.

In some cases a manual shift of the heating curve is necessary. This is done with the parameter:

Menu→ Mixer 1-4 settings →Curve shift

16.4 Equithermal regulation

After the correct selection of the heating curve value, the temperature of the mixed heating circuit is set automatically based on the outside temperature. This allows the room temperature to be kept constant regardless of the outside temperature. Therefore, the correct setting of the heating curve value is essential.

When looking for the correct heating curve, turn off the thermostat function (whether it is connected or not) in the menu:
Menu →Service Settings→Mixer 1-4 settings→Thermostat selection→Off

16.4.1 Equitherm curve setting

Underfloor heating: 0,2 - 0,6
Radiator heating: 1,0 - 1,6

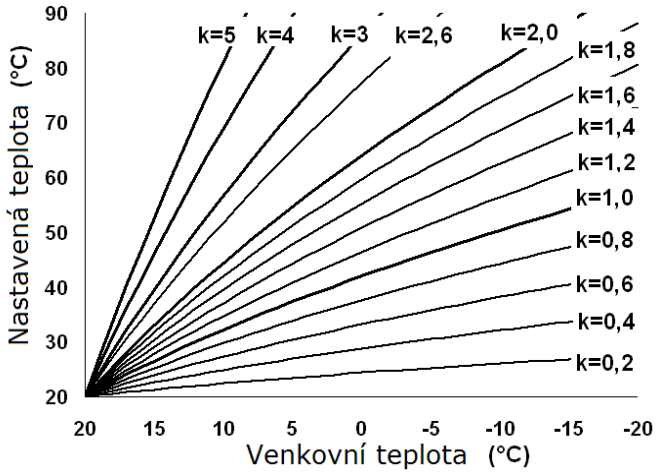

Figure 8. Equithermal curves

Instructions for selecting the correct heating curve

- If the room temperature rises when the outside temperature decreases, the heating curve is set too high.
- If the room temperature drops when the outside temperature decreases, the heating curve is set too low.
- If the room temperature is optimal during cold weather and too low when the weather warms up, it is recommended to increase the value of the *Curve shift* parameter and select a lower heating curve.
- If the room temperature is too low during freezing weather and too high during warming weather, it is recommended to reduce the value of the *Curve shift* parameter and select a higher heating curve.

Poorly insulated buildings require a higher equithermal heating curve setting. In well-insulated buildings, the heating curve should be set to a lower value.
The desired MIX temperature calculated from the heating curve can be reduced or increased by the controller if it falls outside the temperature limitation range for the heating circuit.

16.5 Lowering the Mixer temperature

It is set in:

Menu→ Mixer 1-4 settings→ Mixer 1-4 night time decrease

The controller allows setting the desired temperature reduction of the MIX according to the time program. The setting is the same as for the HUW temperature reduction time program.
The Mixer temperature reduction time program is activated by selecting *Yes.*
When reduced to the value "OFF" it is possible to switch off the heating circuit pump. By this change, the heating circuit pump is switched off according to the set time schedule.

17 Information

They are accessible in:

Menu →Information

The information menu allows you to check the individual boiler and heating system temperatures and at the same time displays which devices are currently active. The individual pages of the information menu can be scrolled through using the "right" or "left" arrows.

Additional information windows will be displayed after connecting add-on module C.

18 Favourites menu

After entering the MENU, an icon is displayed on the bottom bar: . When clicked, a menu with your favourite menu items will appear.
You can add more items to the FAVORITES menu by holding your finger on the desired icon from the user menu.
To remove an item from the FAVORITES menu, open the Favourites menu, hold your finger on the icon you want to remove and confirm the removal.

19 General settings

They are accessible in:

Menu →General settings

Clock
Allows you to set the current time. This setting is important for the correct operation of time programs and displaying alarm history.

Date
Allows you to set the current date. This setting is important for the correct operation of time programs and display of alarm history.

Brightness
Allows you to change the brightness of the touch screen.

Sound
Allows you to turn off/on sound alerts.

Language
Allows you to change the menu language. There are several menu language options available.

Software update
Updates are performed according to the following procedure:

- There is a port for inserting a microSD card at the bottom of the control panel. Insert the card as in Figure 9.

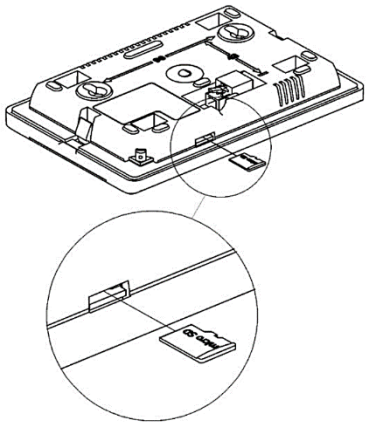

Figure 9. Inserting a microSD card into the control panel port

- When the card is inserted into the display, the software update should load automatically. If not, select: *Menu - General settings - Software update*.
- The first thing to do is to update Module A. When the update is complete, the message "*Update successful*" will appear.
- The following is a panel update.
- If an error occurs after the update, repeat the update. If it occurs only for the panel, install only the software for the panel.
- SW playback is done only on Module A and Panel!
- In the service menu under the code (0000) select "*Restore defaults settings*".
- After restoring the factory settings, it is recommended to restart the controller by unplugging it and plugging it back in.
- After complete installation, it is necessary to select the correct type and output of the boiler via the service menu (4096).
- The software update is now complete.

Weather temperature correction
Allows you to set the correction of the connected outdoor sensor.

20 Notice

20.1 Hot buffer refill point

The controller allows to activate the function "DO NOT REFILL" depending on the level of heating of the storage tank. This function is activated in the menu:

Service Settings→ Buffer settings→ Hot buffer refill point

After the accumulation has heated up to the set level, the warning "***Do not refill! Check buffer temperature!***", which is accompanied by an acoustic signal.
The warm-up level for the alert display is factory set to 70%.

20.2 Maximum boiler temperature exceeded

If the boiler temperature exceeds 95°C, the fan is switched off and the display shows the warning "***Maximum boiler temperature exceeded.***". The HUW and Mixer pumps are put into operation and the mixing valves are opened fully.
If the instantaneous temperature in the HUW tank is higher than the parameter *Max. HUW preset temperature* during this condition, the HUW pump will remain off.
If *Mixer 1-4 support = Floor on* is selected, the pump and MIX drive operate in their normal mode, regardless of this warning.

The warning is automatically cancelled when the boiler temperature is lowered.

20.3 Preview

If the top door is opened during boiler operation, the door switch will open and the display will show the ***PREVIEW*** warning. In this condition, the exhaust fan will start to operate at full power.
When the top door is closed, the warning is automatically cancelled and the boiler goes into normal operation.

If the door switch function is switched off in:

Menu→ Boiler settings→ Wood gasification output→ Door sensor activation→ OFF

this warning is not displayed.

20.4 Auto embers maintenance

When the fuel level in the feed chamber drops below the detection threshold, the controller will go into STOP mode and the display will show a log of wood in red along with the warning "***Hot embers maintenance from fuel detection system.***".
Returning to OPERATION mode requires user intervention and fuel application.

20.5 No fuel from flue gas temperature

If the flue gas temperature drops below 90°C and the time given by the service parameter *Minimal OPERATION time* elapses, the controller switches the boiler to STOP mode and the display shows the warning "***No fuel from flue gas temperature.***".
Boiler shutdown by flue gas temperature occurs in case of failure of the fuel shortage detection mechanism or in case the stoker function is deactivated.

21 Alarms

21.1 Flue gas temperature sensor damage

The alarm is activated if the flue gas sensor is damaged or if the measuring range of the sensor is exceeded. The alarm is reset by switching the controller off and on again. It is necessary to check the sensor and replace it if necessary. If the flue gas temperature sensor is damaged, an emergency mode of boiler operation is available - please contact the boiler manufacturer.

21.2 Boiler temperature sensor damage

The alarm is activated when the boiler sensor is damaged or when the measuring range of the sensor is exceeded. The fan, mixing valves and pumps operate in the same way as in the "***Boiler overheat***" alarm - see chapter 21.4.

21.3 Loss of communication

The control panel is connected to the power module via a communication line. In case of damage to this cable, the display will show a "***Loss of communication***" alarm. The controller is still in operation and works normally based on the set parameters. It is necessary to check the communication cable and replace it if necessary.

21.4 Boiler overheating, open contact of emergency thermostat STB

The alarm is activated if the power contact on the independent emergency thermostat STB, which protects the boiler from overheating, is open.
In the WOOD GASIFICATION mode, the power to the exhaust fan is mechanically disconnected.
In the PELLET BURNER mode, the power supply to feeder 1 (from the hopper), the burner fan and the exhaust fan will be mechanically disconnected.

After the boiler has cooled down below 80°C, unscrew the cap of the STB emergency thermostat and press the reset button with a suitable object. The boiler is put into operation.

22 Other features

In addition to the above functions, the controller provides a number of other activities.

22.1 Maintenance

The boiler is equipped with the function "MAINTENANCE", which ensures that in the STOP mode, due to the signal from the fuel detection mechanism, the base layer remains hot and it is not necessary to ignite during refueling. This function switches the fan at regular intervals to a preset output of 40% for a preset period of 30 s. The intensity of the MAINTENANCE can be set in the menu:

Service Settings→ Wood Gasification settings → Embers maintenance interval time

For longer downtimes (over 8 h), we do not recommend using this function as it leads to an excessive reduction in the size of the base layer. A sufficient base layer, even if burnt out, is more valuable for a flood than a small layer, even if glowing.

22.2 Power failure

In the event of a power failure, the controller returns to the mode it was in before the power failure.

22.3 Protection against freezing

If the boiler temperature drops below 5°C, the pumps are activated and allow circulation of the heating water. This ensures that the process of water freezing at low temperatures is slowed down. However, this function is not able to completely protect the heating system from freezing.

22.4 Protection of pumps and mixers against freezing

The controller ensures protection of pumps (boiler, HUW and heating circuits) and mixers against scaling. It consists in their regular switching (every 167 h for about 15 s). For this reason, it is necessary to keep the controller energized even during the off-heating season. The function is active when the controller is switched off using STAND BY or STOP mode.

22.5 Solar

The controller allows you to control the operation of solar collectors for heating water in a DHW tank or storage tank.
The control sensor is a sensor that regulates the speed of the solar pump using a PWM signal. When charging the DHW tank, the control sensor is the DHW temperature sensor; when charging the storage tank, it is the lower storage temperature sensor.
The need to charge the DHW with solar energy is determined in the same way as during normal operation, based on the *HUW preset temperature* and *HUW cont. hysteresis*.

The heat from the solar collector for charging the tank can only be used when the temperature on the solar collector exceeds the *Minimum collector temperature* and, at the same time, the temperature difference between the solar collector and the control sensor is greater than the value of the parameter *Delta T pump activation*. Under these circumstances, power is supplied to the solar pump and the pump starts operating at 100% power given by the PWM signal.
If the difference between the solar collector temperature and the control sensor temperature starts to decrease and reaches the value given by the parameter *Delta T pump deactivation*, the solar pump is switched off.
Between these two extreme states, the speed of the solar pump changes linearly in the range of 100% and the value of the *Minimal pump rotations*.

If the solar temperature reaches the *Maximum collector temperature* parameter value, the solar pump will switch on at 100% power for safety reasons and:

- the DHW tank will be charged up to the *Max HUW preset temperature* service parameter value (if the control sensor is the DHW temperature sensor).
- the storage tank is charged up to the value of the *Boiler cooling temperature* service parameter (if the lower storage temperature sensor is the control sensor).

If the solar temperature continues to rise and reaches the *Collector deactivation temperature* parameter, the solar pump will be shut down to prevent damage due to changes in the internal structure of the glycol mixture.

The solar collector is also equipped with *Anti-freeze function*. If the temperature on the solar sensor falls below this value, the solar pump is switched on at the power given by the *Minimal pump rotations* parameter to prevent damage to the solar collector.

All parameters related to solar operation are set in:

Service settings → Solar

see chapter 33.2.8.

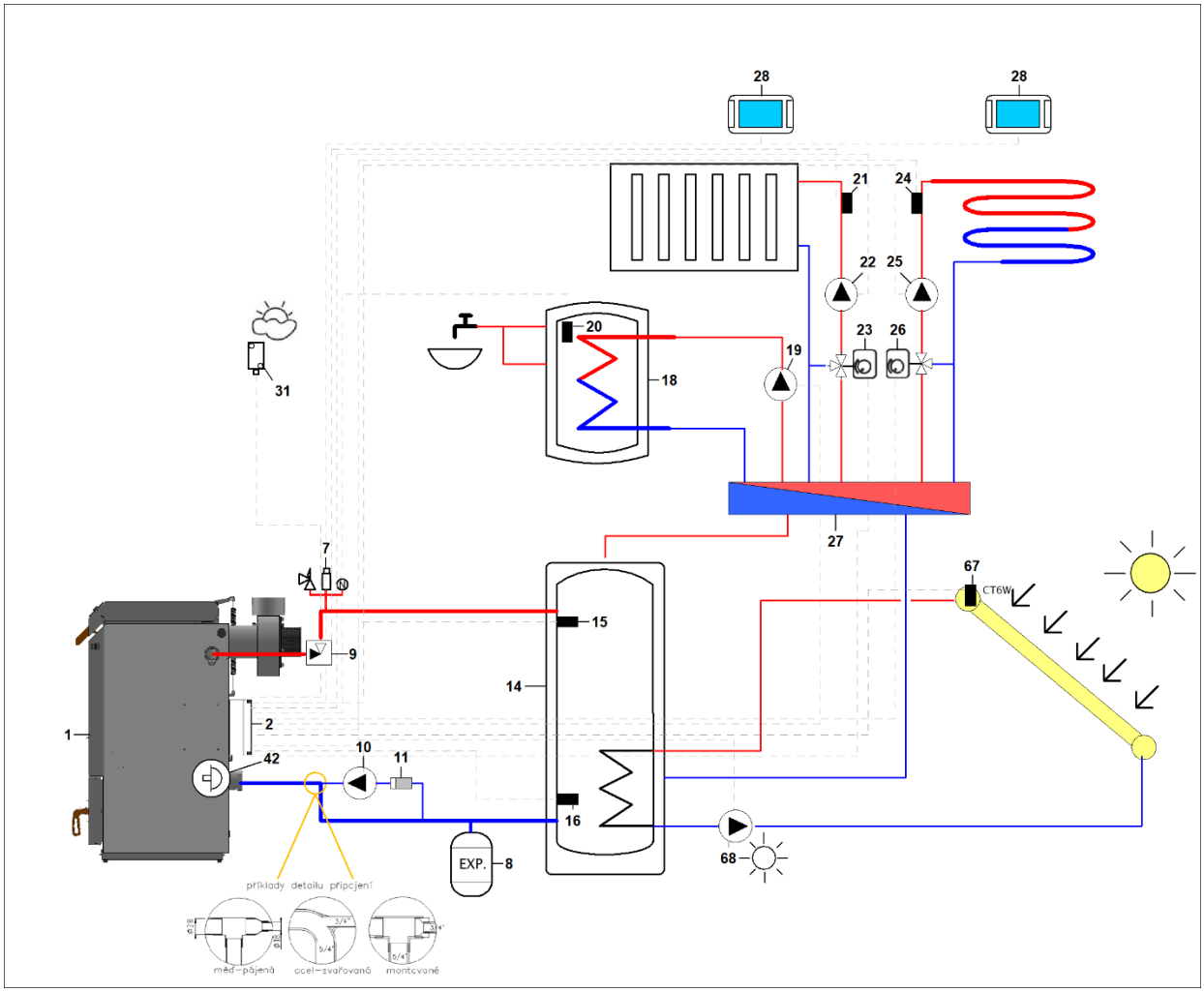

Figure 10. Hydraulic connection with solar collector:

16 – lower temperature sensor for storage, 67 – solar temperature sensor, 68 – solar pump

22.6 Ventilation flap

The controller allows you to control the ventilation flap for electronic control of fresh air supply to the boiler room. When the boiler is in STOP or OFF mode, the ventilation flap is closed. When the boiler is put into operation, the flap opens automatically.
The appropriate type and method of connecting the ventilation flap to the controller is described in section 32.10.
The appropriate ventilation flap mode is set in:

Service settings → Ventilation flap activate

see section 33.2.11.

22.7 Hot-air unit

The boiler controller can control the fan of a "water-to-air" hot-air unit. Control is performed via a 0–10 V signal (connector Z31 on the controller's motherboard). The hot-air unit must be equipped with a connector for 0–10 V control or must be controlled by a frequency converter with this function.

The hydraulic connection of the hot-air unit is made using a standard configuration with a pump and a mixing valve.

The hot-air unit system can only be operated in MIX 1 mode. Other heating circuits do not have this function built in.

To connect and activate the hot-air unit, set the following in the menu:

Service Settings → Mixer 1 setting → Mixer 1 support → Air heater

Once this feature is enabled, functions related to controlling the forced-air unit will appear in the user menu under *Mixer 1 settings*.
You can select the *Air heater fan speed*, i.e., the fan speed on a scale of 1 to 5. Increasing the value by one level increases the output signal by 2 V; for example, level 1 corresponds to 2 V, and level 5 corresponds to 10 V of output signal.
In this menu, you can also set the desired temperature of the air handler, the operating schedule, and control via a room thermostat.

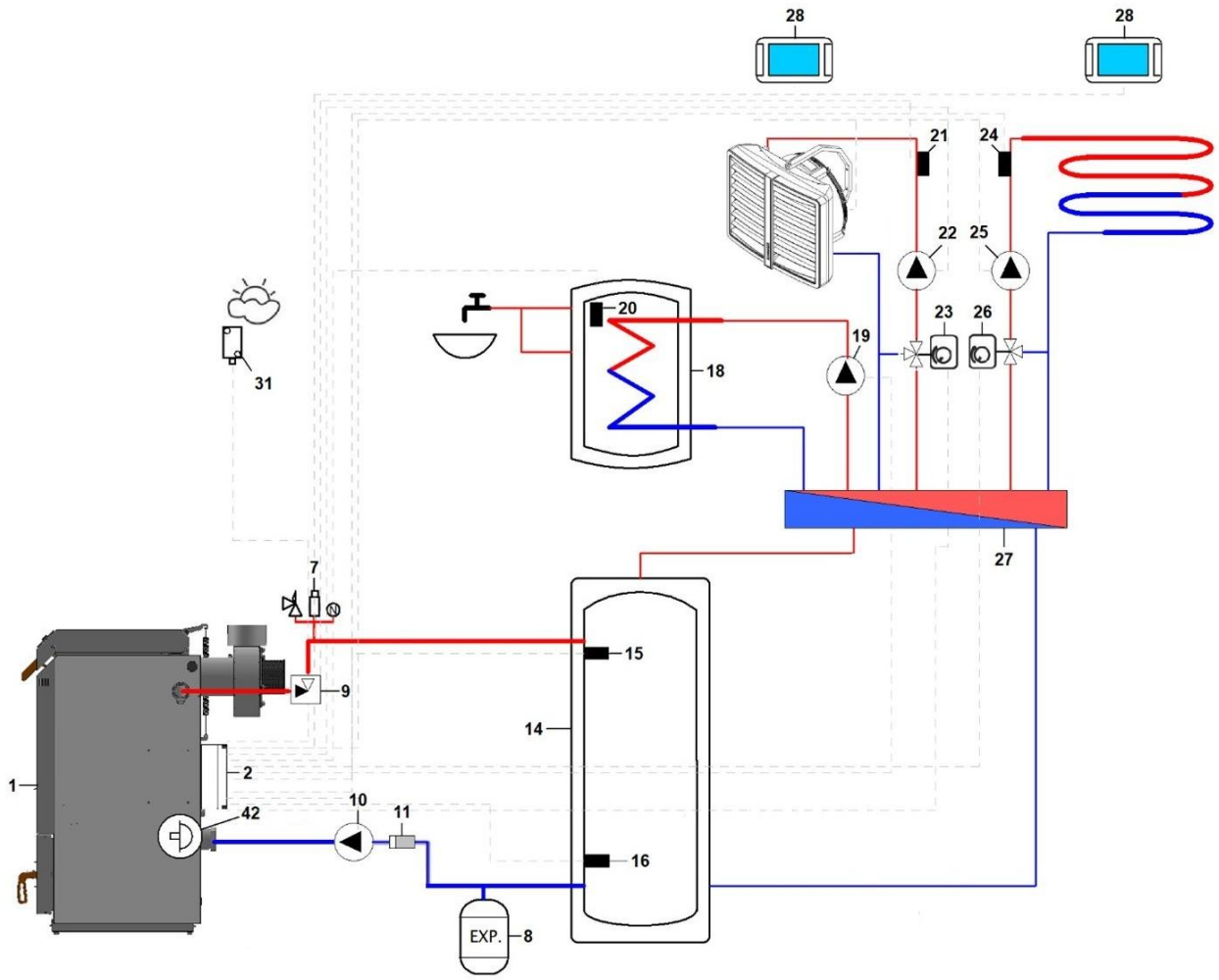

Figure 11. Hydraulic connections for a air heater

23 Replacing the mains fuse

The mains fuse is located inside the controller cabinet on the power module. It protects the controller from damage. The fuse can only be changed by a suitably qualified person after the mains supply has been disconnected. Use only slow, porcelain fuses with a 5x20 mm delay with a rated overcurrent of 6.3A.

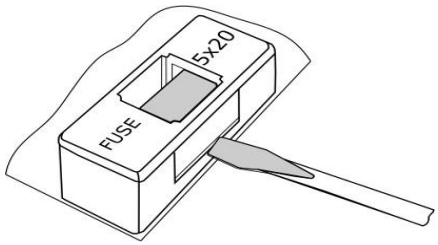

Figure 12. Replacing the mains fuse

To remove the fuse, the fuse housing must be lifted with a flat screwdriver and the fuse carefully removed.

24 Room panel eSTER

The controller can work with:

- wireless battery room thermostat eSTER40R, via two-way ISM communication
- wireless room panel eSTER80R with room thermostat function, via two-way ISM communication
- wired room panel eSTER90P TOUCH with room thermostat function.

The thermostat and room panel simultaneously transmits useful information, e.g. information about the boiler and heating system status, fuel level, burner operating mode, signals alarms, allows setting of controller parameters, operating modes, and also acts as an additional boiler control panel.

25 Internet module evoNET

The controller cooperates with the evoNET internet module. After connecting the internet module, remote access (preview, parameter changes, operation history, etc.) is possible via LAN or WiFi. Registration is done on the website www.evonet24.com via a web browser. The evoNET app is also available on Google Play for Android or App Store for iOS.

Instructions for service organisations installing and commissioning the boiler

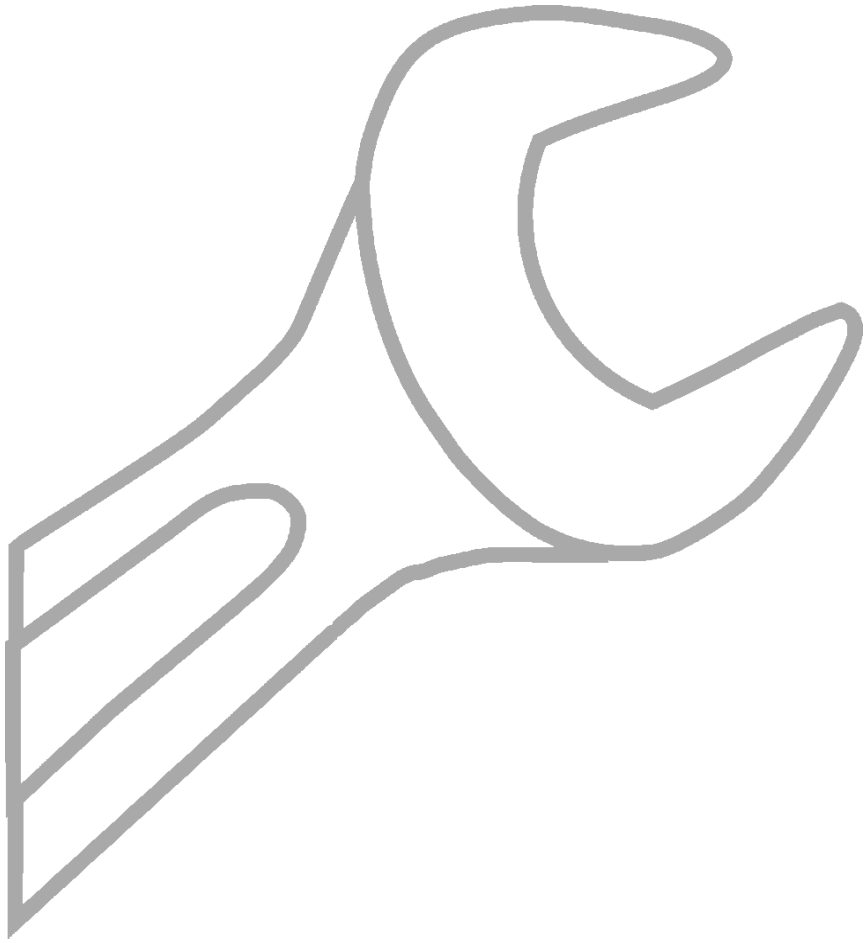

26 Technical data

Electrical voltage		~230V / 50Hz
Current drawn by the		0,04 A
Maximum rated current		6 (6) A
Degree of protection of the		IP20
Ambient temperature		0...50 C°
Storage temperature		-25...65 C°
Relative humidity		0 - 90%, no condensation vapour
Type of temperature sensors, terminal numbers: 5-6; 7-8; 9-10; 27-28; 29-30; 31-32; 80-81; 85-86 54-55 90-91 13-14		CT10 (NTC10K) CT2S (PT1000) CT6 (PT1000) CT10P (NTC10K)
Measuring range of CT2S temperature sensors		0...300 C°
Measuring range of CT6 temperature sensors		-10...180 C°
Measuring range of CT10 temperature sensors		0...100 C°
Measuring range of CT10-P temperature sensors		-35...40 C°
Measurement accuracy of temperature sensors		±2 C°
Clamps	Z23, Z24, Z25, Z26, Z1, Z3, Z4, Z5, Z37	screw clamps, wire cross section 0.5 - 2.5 mm^2, tightening torque 0.5 Nm, wire stripping length: 8 - 9 mm
	Z2, Z31, Z6, Z7, Z8, Z9, Z10, Z31	screwless clamps, conductor with stripped end; conductor cross-sectional area 0.5 - 0.75 mm^2 conductor stripping length: 8-9 mm; (push button to remove the cable)
	1-32; 52-79; 80-95	screw clamps, wire cross-section up to 0.5 - 1.0 mm^2, tightening torque 0.2 Nm, wire stripping length: 7 mm
Touchscreen resolution		480 x 272
Total weight		2 kg
Standards		EN 60730-2-9 EN 60730-1
Software class		A
Class of protection		Suitable for incorporation into Class I equipment
Degree of pollution		Level 2 according to EN 60730-1
Rated pulse voltage		2500V according to EN 60730-1

27 Conditions for storage and transport

The controller cannot be exposed to direct weather conditions, i.e. rain and sunlight. Storage and transport temperature cannot exceed the range of -25°C to +65°C. During transport, the device must not be exposed to vibrations greater than those of normal transport.

28 Replacing the control panel

To replace the control panel (1), the panel must be removed from the boiler door cover by inserting suitable flat objects (2) into the slots shown in Figure 13. This will cause the panel stops to dislodge and allow the panel to be removed.

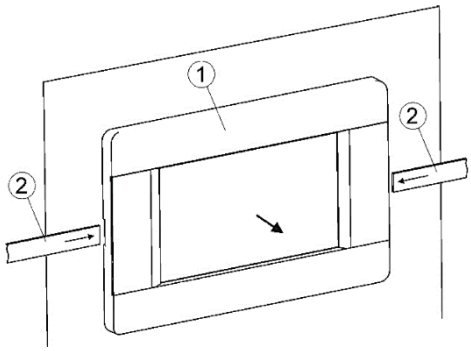

Figure 13. Removing the control panel

29 Wiring the electrical installation

The controller is designed for 230 VAC / 50 Hz power supply. The electrical installation must be:

- three conductors, with protective conductor PE,
- in accordance with the applicable regulations,
- equipped with a residual current device (RCD) with inrush current IΔn≤30 mA, which protects against the effects of electric shock and limits damage to the controller, including fire protection.

After the controller is switched off using the controls, there may still be dangerous voltages at the terminals. Before starting installation work, disconnect the mains cable and make sure that there is no voltage at the terminals.

The connecting wires must not come into contact with surfaces at a temperature higher than their rated operating temperature. Connect the power supply wires to the terminals marked with an arrow ↑.

For safety reasons, the controller must be connected to the 230 V AC mains in the order of connection of the phase (L) and neutral (N) conductors. Make sure that the L and N conductors are not confused within the building's electrical system, e.g. in the electrical socket or in the junction box of the electrical socket!

Connect the protective conductor of the power cable to the ground rail connected to the metal cover of the boiler.

Connect the ground wires to the controller terminal marked ⏚.

The connection of any peripheral equipment must only be carried out by a qualified person in accordance with local regulations. Examples of such devices are pumps, valve actuators or relays. It is essential to observe the safety principles in connection with protection against electric shock.

29.1 Preparing the cabling

The maximum cable stripping length is 35mm, for the protective conductor 65mm as shown in Figure 14.

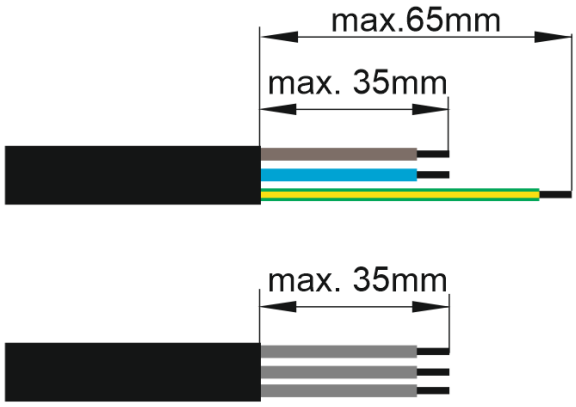

Figure 14. Cable stripping length

If the above requirement is not met, a cable tie should be tightened near the connector so that accidental release of one wire from the connector does not cause a hazard.

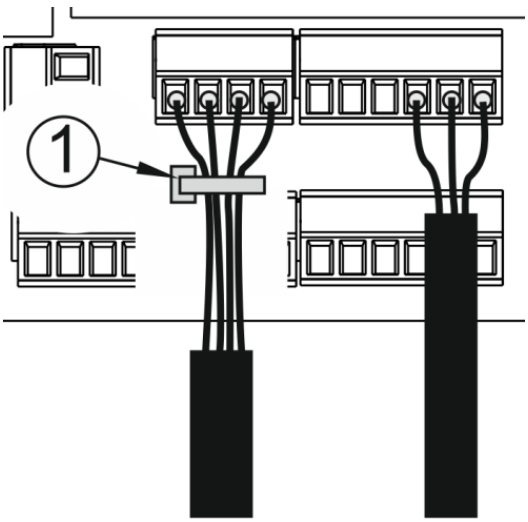

Figure 15. Cable stripping length, where: 1 - cable tie

There are hot elements on the circuit board such as radiators labeled ZMech4, ZMech5, ZMech6, electrical chokes labeled as L1, L2, L7 and hot paths on the circuit board. Cables and wires shall be separated from these hot elements or should have resistive insulation designed for high temperature operation.

29.2 Wiring the P module

Combined boilers for lump wood and wood pellets are equipped with a controller, which consists of the main module A and additional module P. The main **module A** ensures the operation of the lump wood boiler and heating system (Buffer tank, 2 mixed heating circuits, hot water heating), **module P** ensures the operation of the pellet burner.

The connection of the main module A to module P is made as shown in Figure 16.

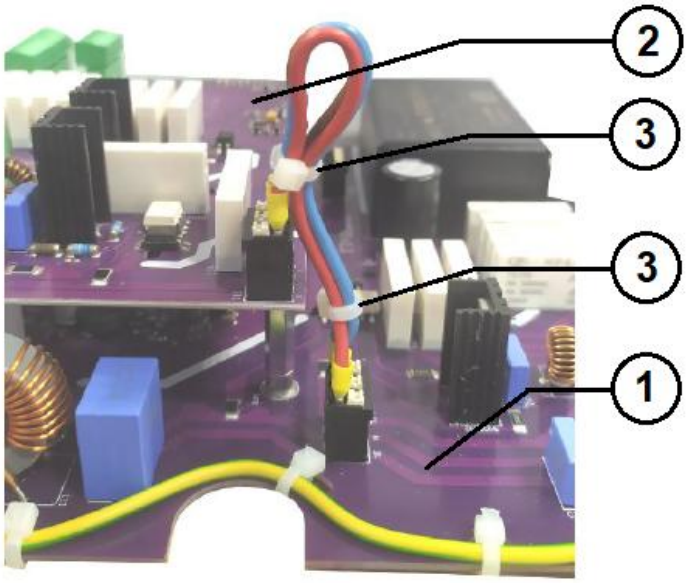

Figure 16. Connection of module P to module A,

where: 1 - main module A, 2 - module P, 3 - cable tie

The cable ties (3) must be fixed on the conductors in such a way that accidental release of one conductor from the connector does not cause danger.

30 Electrical wiring diagrams of the boiler

30.1 Electrical diagram of the controller control panel

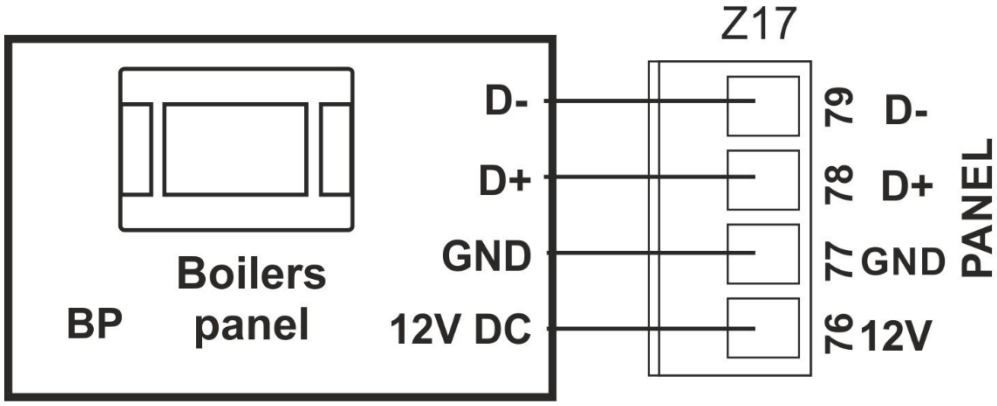

Figure 17. Wiring diagram of the controller control panel

30.2 Electrical wiring diagram of the exhaust fan R2E180-CG82-05

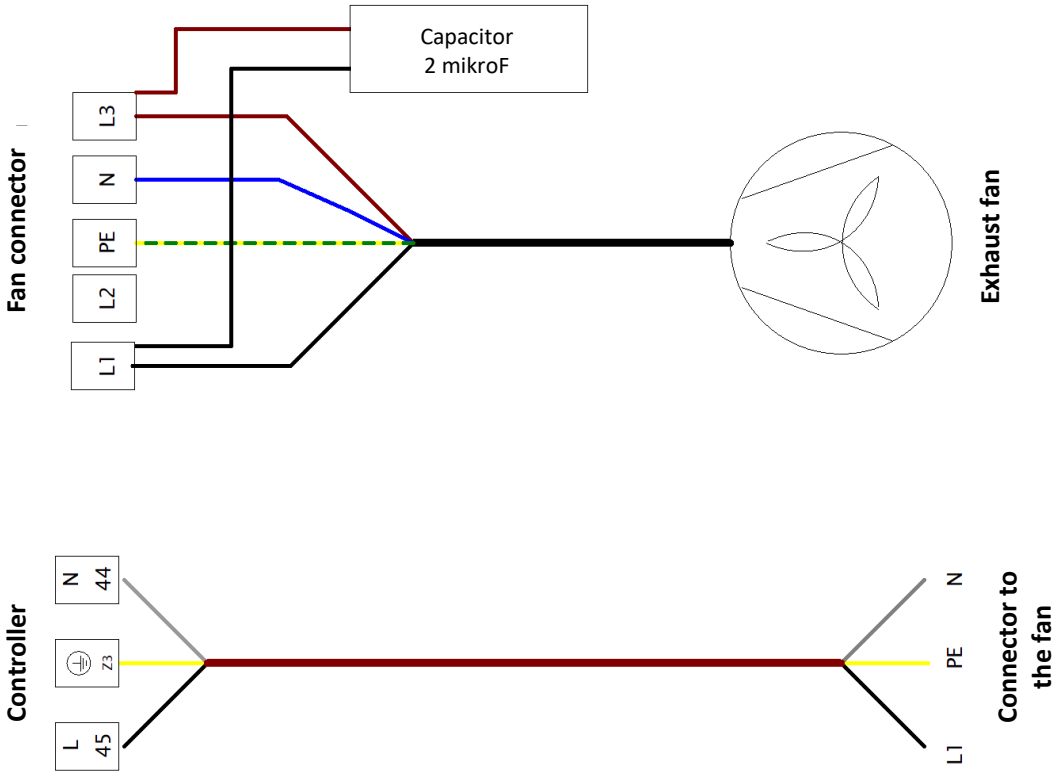

Figure 18. Electrical wiring diagram of the exhaust fan

30.3 Wiring diagram of lambda sensor and stepper motor

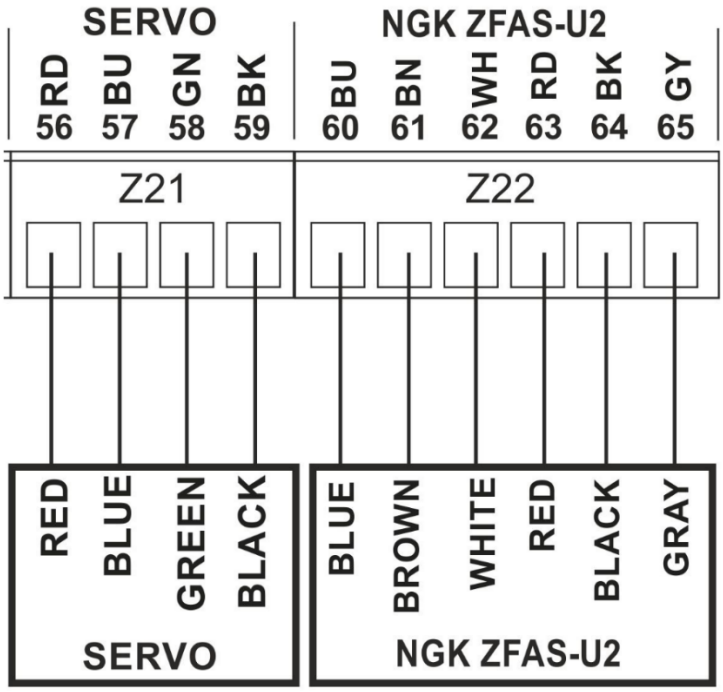

Figure 19. Wiring diagram of lambda sensor (NGK ZFAS-U2) and stepper motor (SERVO)

30.4 Electrical wiring diagram of the door switch and fuel detection mechanism sensor

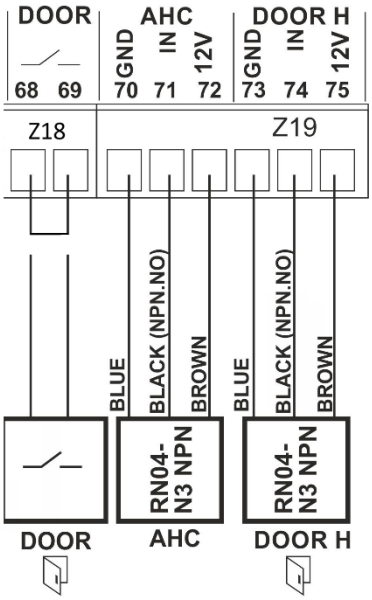

Figure 20. Wiring diagram of inductive sensors

30.5 Electrical diagram of the burner and fuel feeder

The pellet burner is connected to the regulator (module P) by one 10-wire signal cable. This cable provides power to the individual burner elements (push fan, feeder 2, ignition, rotary cleaning drive, optical flame detection sensor and burner temperature safety sensor).

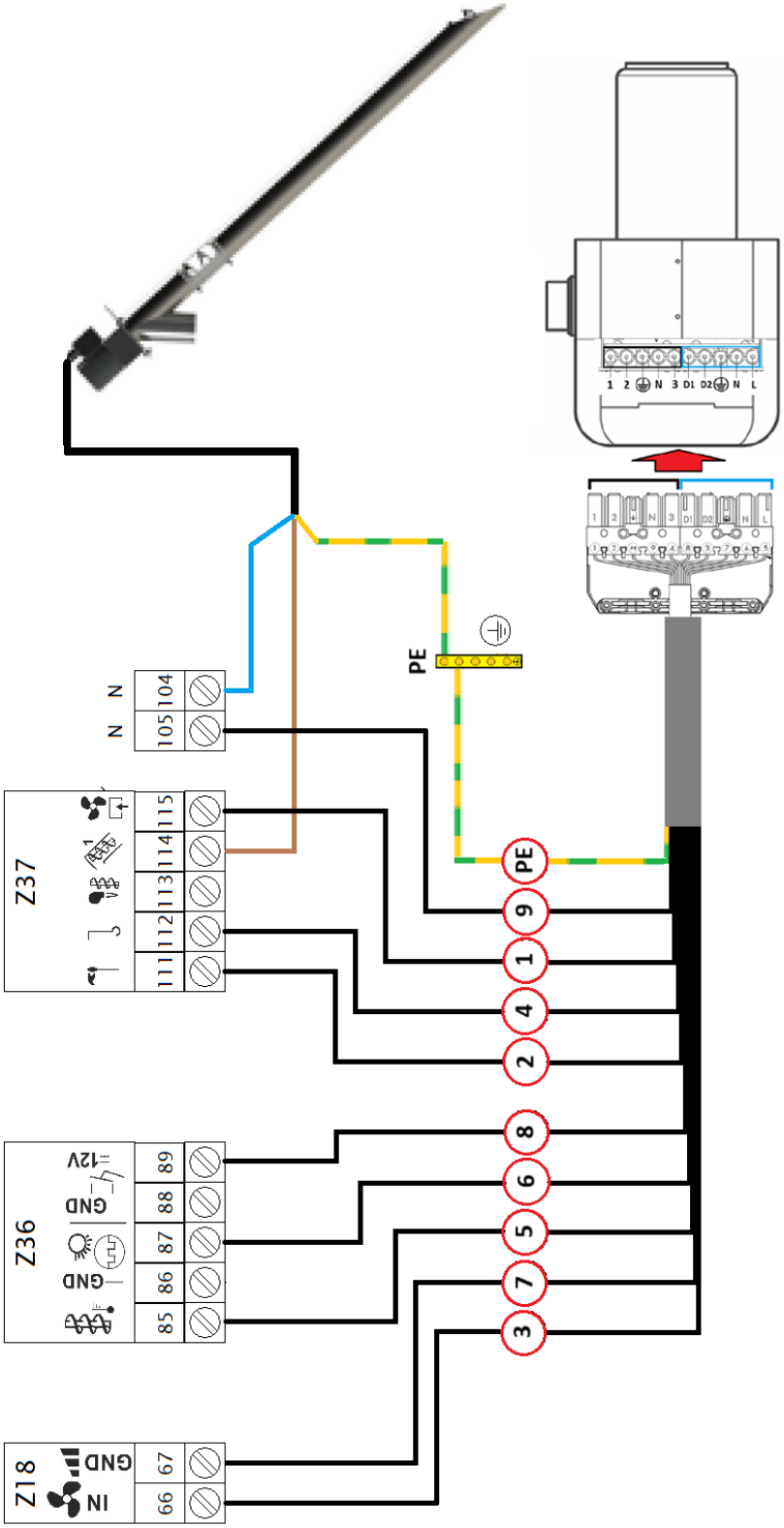

Figure 21. Wiring diagram of the burner and feeder signal cable

Burner cable wire number:	Number of the terminal in the controller:	Burner element:
1	115	Pressure fan
2	111	Ignition
3	66	Hall sensor - IN
4	112	Rotary cleaning
5	85	Burner temperature sensor
6	87	Optical sensor
7	67	Hall sensor - GND
8	89	Hall sensor – power 12V
9	105	Common zero 230V
PE	GR strip	Earthing

The fuel feeder is connected to the controller (module P) by one 3-wire cable. The feeder cable is disconnectable via a PC connector (IEC C14/IEC C13).

Feeder cable lead:	Number of the terminal in the controller:
Brown	114
Blue	104
yellow-green	GR strip

31 Connecting temperature sensors

The controller works with temperature sensors of the following types:

- CT10 (NTC10K) all water temperature sensors (boiler, HUW, Mixer, accumulation)
- CT10P (NTC10K) outdoor temperature sensor
- CT2S (PT1000) flue gas temperature sensor
- CT6W (PT1000) solar cell temperature sensor

31.1 Connecting water temperature sensors

The water temperature sensors must be type CT10 (NTC10K).
Connect the appropriate external sensor to the corresponding terminals on the switchboard (see Figure 25) and place the measuring element at the desired location in the heating system. The sensor cable must not be in contact with hot surfaces of the boiler or heating system and must be secured against pulling out.
The sensor cables may be extended with conductors of at least 0.5 mm^2. The total length of the individual sensor wires must not exceed 15 m. The boiler temperature sensor is located in the boiler temperature sump on the boiler shell. The HUW temperature sensor shall be placed in the temperature sump of the HUW tank. The most suitable location for the Mixer temperature sensor is in a temperature sump located in the flowing water stream in the pipe, alternatively it can also be placed on the pipe surface and thoroughly insulated (see Figure 22).

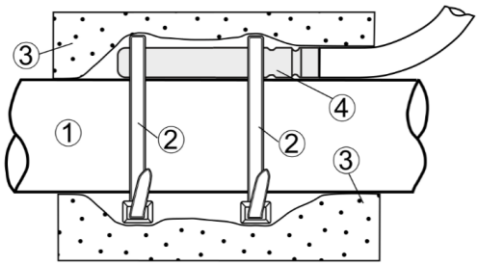

Figure 22. Installation of the temperature sensor on the pipe,

where is: 1 - pipe, 2 - cable tape, 3 - thermal insulation, 4 - temperature sensor

The sensors must be secured against release from the measured surfaces.

Good thermal contact must be ensured between the sensors and the surfaces to be measured. Use a thermally conductive paste for this purpose. The sensor wiring must be separated from the mains cables. Otherwise, errors in temperature measurement may occur. The minimum distance between these cables is 10 cm. The sensor cabling must not be in contact with hot parts of the boiler and heating system. The temperature sensor cables are temperature resistant up to 100°C.

31.2 Connecting the flue gas temperature sensor

The flue gas temperature sensor must be type CT2S (PT1000). It is installed in the exhaust fan housing. Leaks between the sensor and the flue must be sealed.
The sensor may be installed by a qualified person in compliance with the regulations applicable to chimney systems.
It connects to terminals 54-55 (see Figure 23) in the controller cabinet.
The flue gas sensor cable must not be in contact with hot parts of the boiler with a temperature exceeding 220 °C.

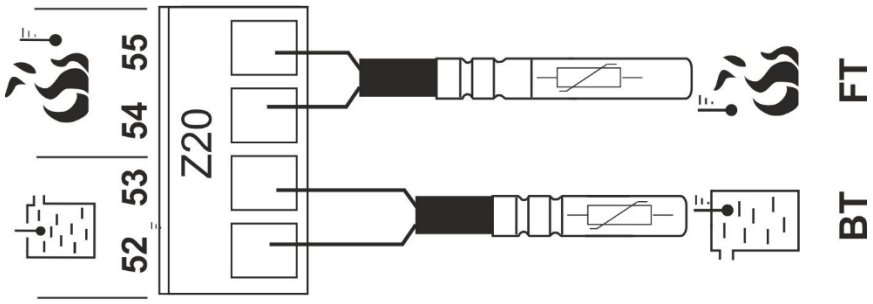

Figure 23. Connecting temperature sensors,

where it is: BT - boiler temperature sensor, FT - flue gas temperature sensor

31.3 Connecting an outdoor temperature sensor

The outdoor temperature sensor must be type CT10P (NTC10K). The sensor is mounted on the coldest part of the house, usually on the north wall of the house under the roof. The sensor should not be exposed to direct sunlight and rain. The sensor must be mounted at least 2 m above the ground, away from windows, chimneys and other heat sources that could affect the temperature measurement (at least 1.5 m).
The sensor is connected by a cable with a minimum cross-section of 0.5 mm^2, maximum 25 m long. The polarity of the wires is not important. Connect the free end of the cable to terminals 13-14 (see Figure 25) on the left wall of the controller cabinet.
Mount the sensor to the wall using the mounting screws. Unscrew the sensor cover to access the mounting screw holes.

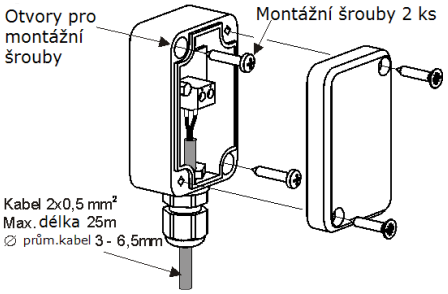

Figure 24. Connection of outdoor temperature sensor CT10P (not included in the basic equipment of the boiler)

31.4 Wiring diagram for external temperature sensors

The external temperature sensors including the room panel are connected via the terminal block on the left wall of the controller cabinet.

The bundle of sensors protruding from the left side of the switchboard must be taped with cable ties.

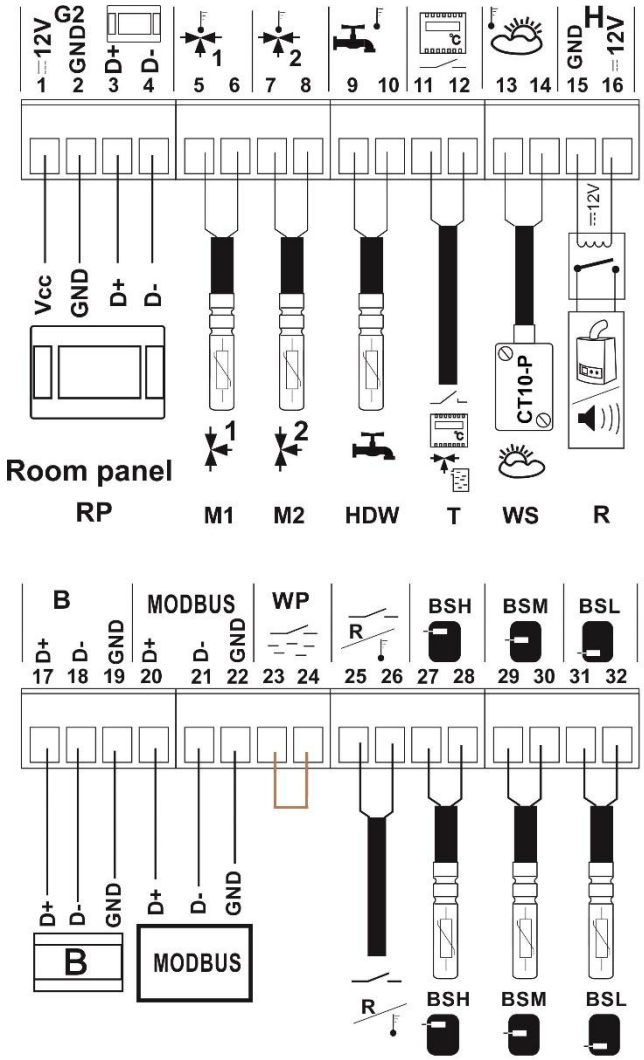

Figure 25. Wiring diagram of sensors and room panel

RP - eSTER room panel
M1 - Mixer 1 temperature sensor (CT10)
M2 - Mixer 2 temperature sensor (CT10)
HDW - HUW temperature sensor (CT10)
T - room thermostat
WS - outdoor temperature sensor (CT10-P)
R - output H (reserve boiler, alarms)

B - expansion module
MODBUS - communication with other systems
WP - heating system pressure sensor
R - reserve output (heat pump)
BSH - Buffer tank temperature sensor - upper (CT10)
BSM - Buffer tank temperature sensor - medium (CT10)
BSL - storage tank temperature sensor - bottom (CT10)

31.5 Checking temperature sensors

Temperature sensors can be checked by measuring their resistance at a given temperature. If a significant difference is found between the measured resistance value and the values given in the following table, the sensor must be replaced.

CT2S (PT1000) - flue gas temperature sensor			
Temperature [°C]	Min. [Ω]	Nom. [Ω]	Max. [Ω]
0	999,7	**1000,0**	1000,3
25	1096,9	**1097,3**	1097,7
50	1193,4	**1194,0**	1194,6
100	1384,2	**1385,0**	1385,8
125	1478,5	**1479,4**	1480,3
150	1572,0	**1573,1**	1574,2

CT6W (Pt1000) - solar cell temperature sensor			
Temperature [°C]	Min. [Ω]	Nom. [Ω]	Max. [Ω]
0	999,7	**1000,0**	1000,3
25	1096,9	**1097,3**	1097,7
50	1193,4	**1194,0**	1194,6
100	1384,2	**1385,0**	1385,8

CT10 (NTC10K) - water temperature sensor CT10P (NTC10K) - outdoor temperature sensor	
Temperature [°C]	Nom. [Ω]
0	**33620**
10	**20174**
20	**12535**
30	**8037**
40	**5301**
50	**3588**
60	**2486**
70	**1759**
80	**1270**
90	**933**
100	**697**
110	**529**
120	**407**

32 Connecting other devices to the controller

32.1 Boiler and HUW pump connection

The controller can control the boiler pump and HUW pump according to the set parameters.
They are connected via the connectors on the top wall of the controller cabinet as shown in Figure 26.

Boiler pump	HUW pump
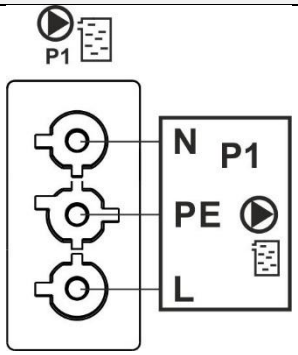	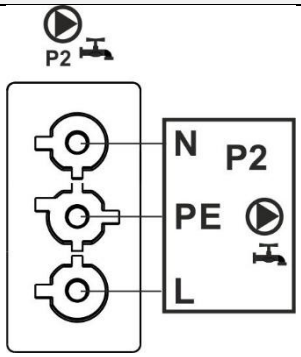

Figure 26. Electrical diagram of the boiler pump and HUW pump

32.2 Connection of mixing valves (Mixers)

The controller works only with drives that are equipped with limit switches. The use of other drives is prohibited. Actuators with an opening time in the range of 30 to 255 s can be used.

Description of Mixer connection and settings:

- connect the Mixer temperature sensor on the left wall of the controller cabinet (see Figure 25)
- in the menu: ***Service Settings→ Mixer 1-4 Settings*** select the heating method from the menu, i.e. *Floor on* or *CH on (Radiators)*.
- in the menu: ***Service Settings→ Mixer 1-4 Settings→ Valve full opening time*** to the correct value (the time is indicated on the drive's nameplate, e.g. 120 s)
- disconnect the power supply to the controller and determine the direction in which the drive opens/closes. To do this, switch the button to manual control and find the position where the temperature in the mixed heating circuit is maximum (in the controller this corresponds to the 100% opening position) and also the position where the temperature is minimum (in the controller this corresponds to the 0% opening position).
- connect the Mixer pump via the connector on the top of the switchboard to the controller (see Figure 27) according to the technical documentation of the pump manufacturer.
- connect the Mixer drive with the controller via the connector on the left wall of the switchboard to the controller (see Figure 28) according to the technical documentation of the actuator manufacturer. Pay attention to the correct designation of the wires for opening and closing the valve.
- connect the power supply to the controller.
- check the correct opening and closing direction of the Mixer drive. Enter the menu: ***Service Settings→Manual Control*** and open the mixer using the *Mixer 1-4 Open* option = *On*. The temperature at the Mixer sensor should increase as the valve opens. If not, turn off power to the controller and replace the power leads. Note: another cause may be poor mechanical wiring of the valve! Check that it is wired in accordance with the manufacturer's documentation.

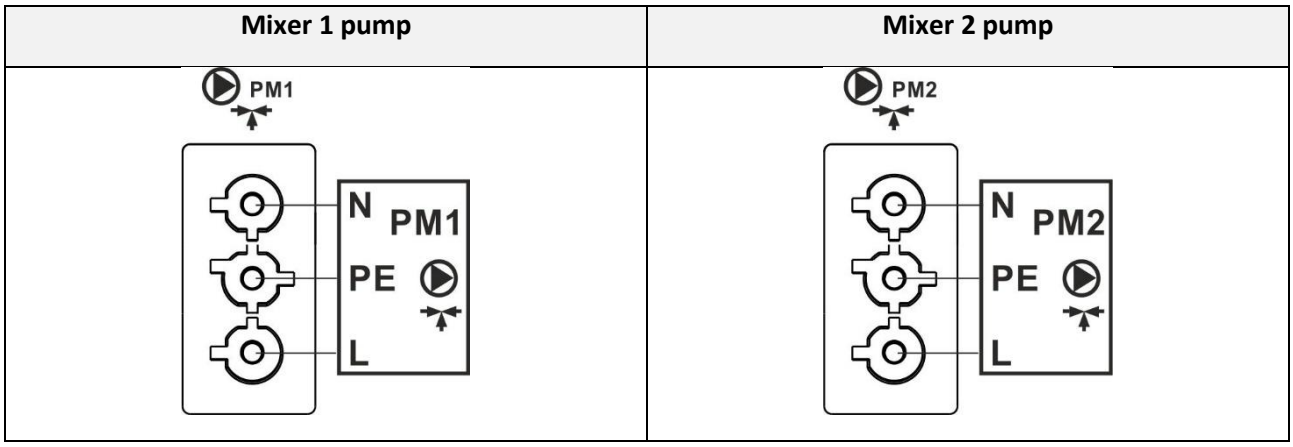

Figure 27. Wiring diagram of Mixer pumps

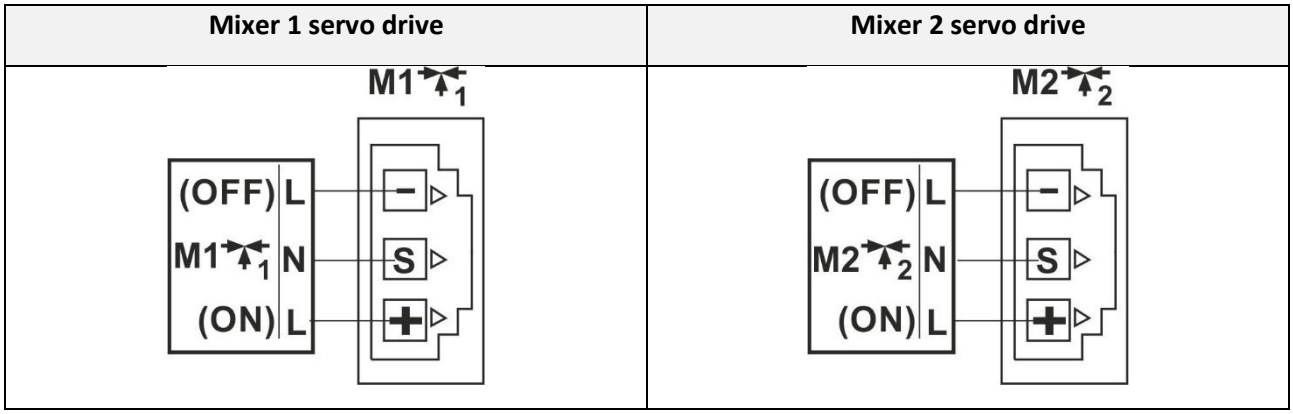

Figure 28. Wiring diagram of Mixer servo drive

32.3 Connecting and setting up a room thermostat

Connect the thermostat to terminals 11-12 (Figure 25) on the left wall of the controller cabinet. After installation, the room thermostat needs to be enabled in the menu to control the mixed heating circuits:

Service settings→ Mixer 1-4 settings→ Thermostat selection→ Universal

The room thermostat, after opening the contacts, starts to reduce the temperature of the mixed circuit according to the *Room thermostat mixer 1-4* parameter. Normally, the Mixer pump is not turned off by opening the contact (unless otherwise set in the service menu). Set the value of the *Room thermostat mixer 1-4* parameter so that the room temperature starts to gradually decrease when the room thermostat contacts are opened.

32.4 Connecting the eSTER room panel

The eSTER room panel can be connected to the controller and can serve as:

- room thermostat
- boiler control panel
- alarm signalling at the installation site
- indication of fuel in the boiler

The wire cross section for the eSTERxxP room panel connection should be 0.5 mm². The maximum length of the wires must not exceed 30 metres. When using wires with a diameter larger than 0.5 mm², a longer cable can be used.

Up to 3 eSTERxxP room panels can be connected to the controller.
When connecting two eSTERxxP room panels, both can be powered from the controller module (four-wire connection - see Figure 29).
For two-wire connection it is necessary to use an external 5V or 12V DC power supply with a minimum current of 400mA. Connect the GND and +12V terminals to an external power adapter. Connect the D+ and D- terminals to the controller - see Figure 30.
In case of connecting multiple eSTERxxP room panels, it is necessary to use an external 12V DC power supply - see Figure 31.

- Four-wire connection

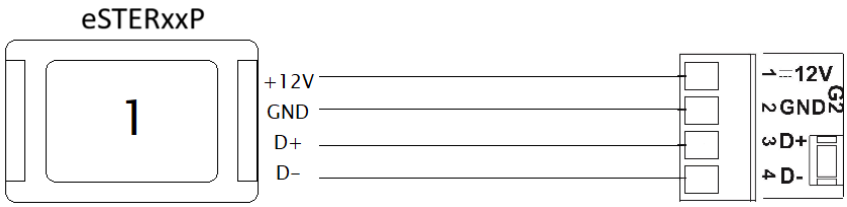

Figure 29. Four-wire connection of the eSTERxxP room panel

- Two-wire connection

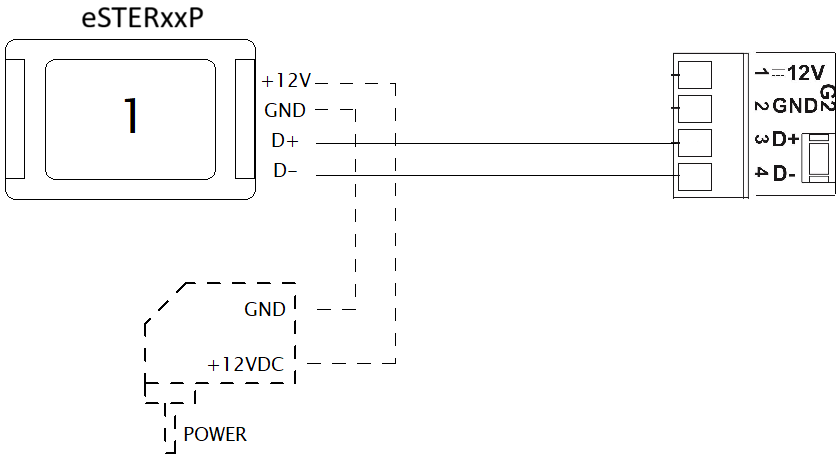

Figure 30. Two-wire connection of the eSTERxxP room panel

- Connecting multiple eSTERxxP room panels

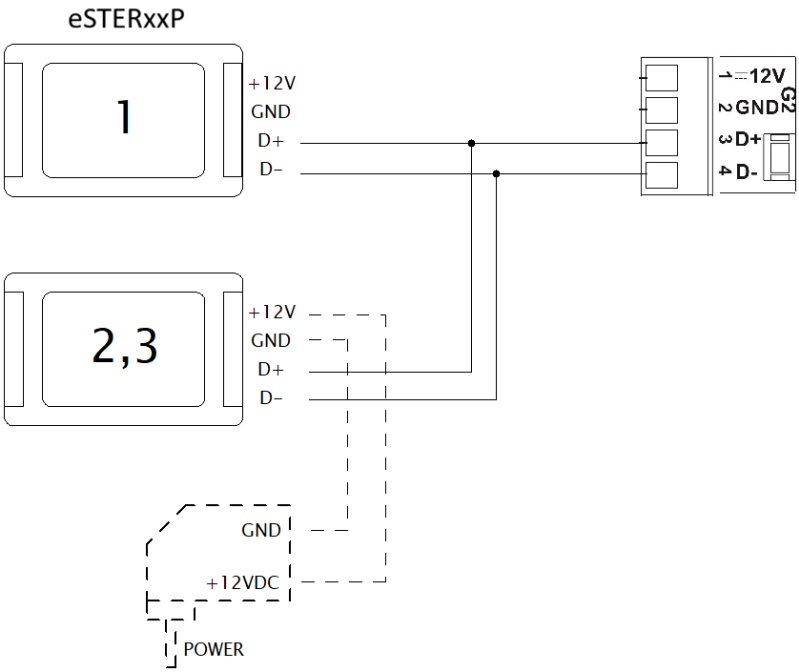

Figure 31. Combined eSTERxxP room panel connection

32.5 Connection of reserve boiler via output H

The controller can control the operation of a standby (e.g. gas) boiler. When the temperature drops in the storage tank and the boiler itself, the reserve boiler is activated.
The standby boiler is connected terminals 15-16 of the power module (it is necessary to open the cabinet lid) of the controller (see Figure 32) using a 12V relay.

Disconnect the mains power before removing the controller cabinet cover. Risk of electric shock! Installation must be carried out by a qualified person in accordance with local regulations.

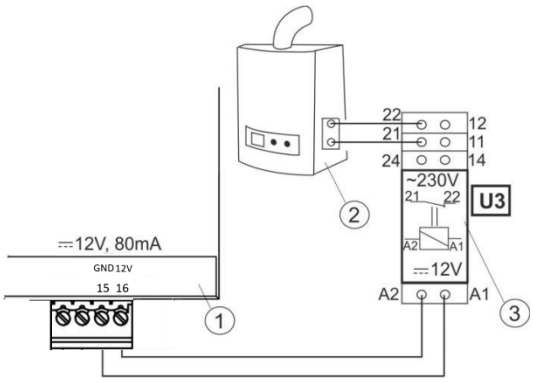

Figure 32. Electrical connection of the reserve boiler:

1 - regulator, 2 - reserve boiler, 3 - 12V DC relay (RM 84-2012-35-1012 and GZT80 RELPOL socket)

The relay is not part of the basic equipment of the boiler, it can be ordered from the boiler manufacturer.

To enable reserve boiler control, you must activate the function in the menu:

Service Settings→ Output H→ Output H→ Boiler

In the same menu, the option to set the temperature at which the reserve boiler should be deactivated (e.g. 35°C) is displayed. The reserve boiler is switched on if there is no voltage at terminals 15-16. The reserve boiler is switched off when these terminals are supplied with 12V (the temperature in the boiler or storage tank is above the set value for deactivating the reserve boiler).
Output state in STAND BY – there is a choice whether output H (switching of the reserve heat source) should be energized or not in STAND mode.
After the reserve boiler is switched on, the boiler pump is switched off when the boiler temperature drops below the boiler pump switch-on temperature. The HUW pump or Mixer pump operates independently of the boiler or accumulation temperature after the standby boiler is switched on.

A three-way diverter valve can be connected to separate the heating circuit and HUW from the storage tank to prevent it from heating up - see Figure 34.

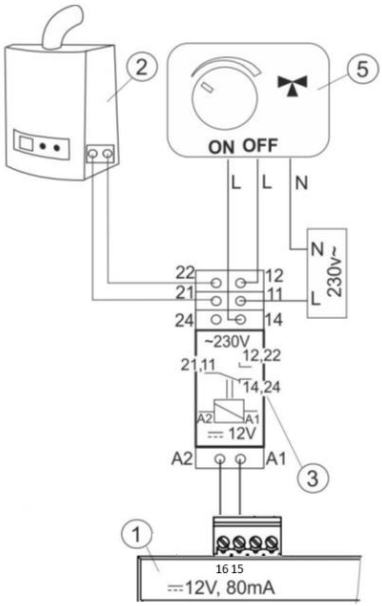

Figure 33. Electrical connection of the reserve boiler and the changeover valve, where:

1 - regulator

2 - reserve boiler

3 - relay

5 - switching valve actuator

Note: terminals 21, 22, 24 must be galvanically isolated from terminals 12, 11, 14.

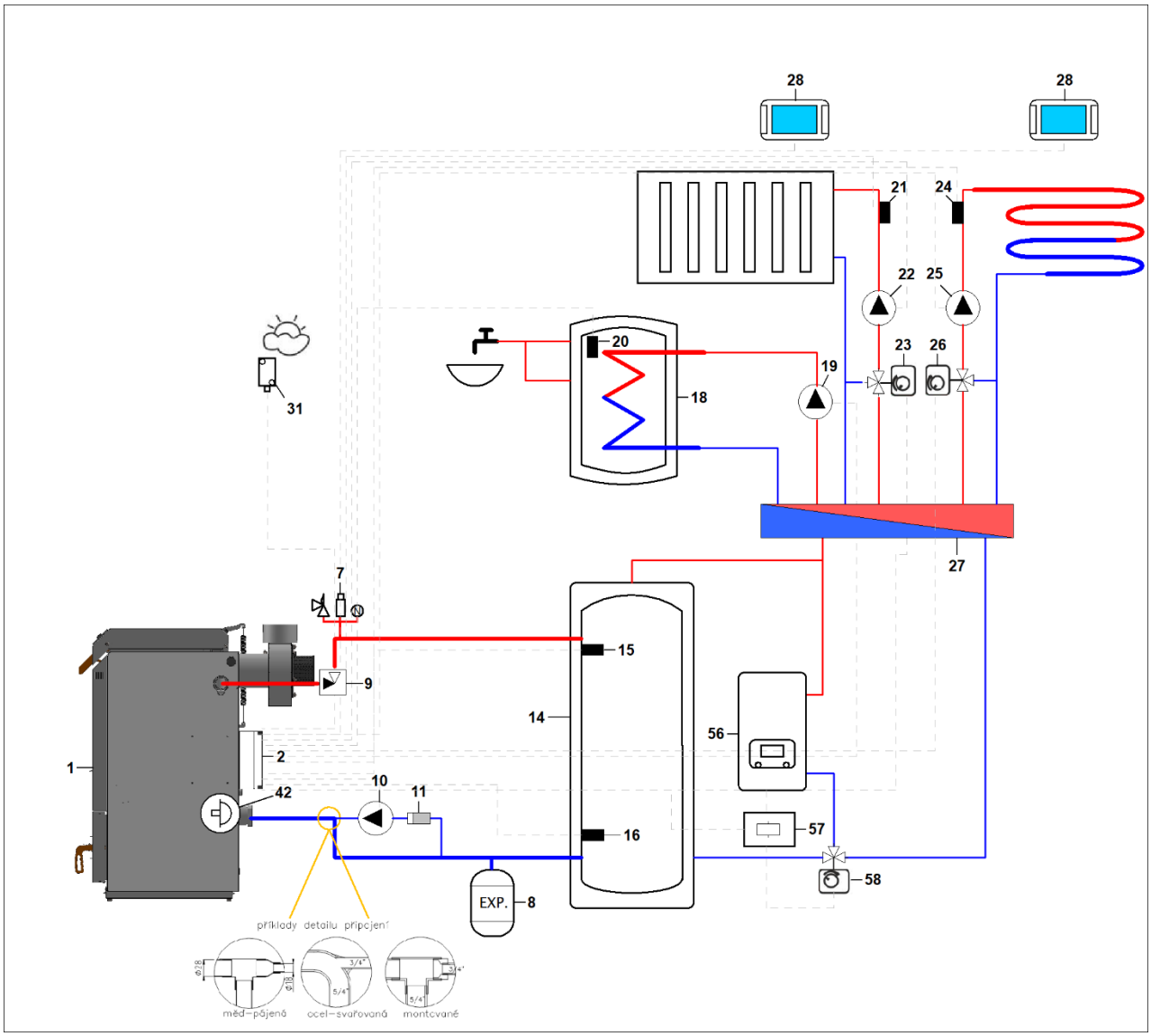

Figure 34. Hydraulic connection with reserve boiler (56) and diverter valve (58)

There is a risk of electric shock from the connected standby boiler. When disconnecting the controller from the mains, it is essential to also disconnect the standby boiler (if controlled by the evoMAX 960DP unit) and ensure that there is no dangerous voltage at the terminals. Protect yourself from electric shock.

32.6 Connection of alarm signalling via output H

By connecting an external device such as a doorbell or a GSM module for sending SMS text messages, the controller can signal alarm conditions.
Connect an external device to signal alarm conditions via a relay to terminals 15-16 of the controller power module (see Figure 35). Alarm signaling must be activated in the menu:

Service Settings→ Output H→ Output H→ Alarm

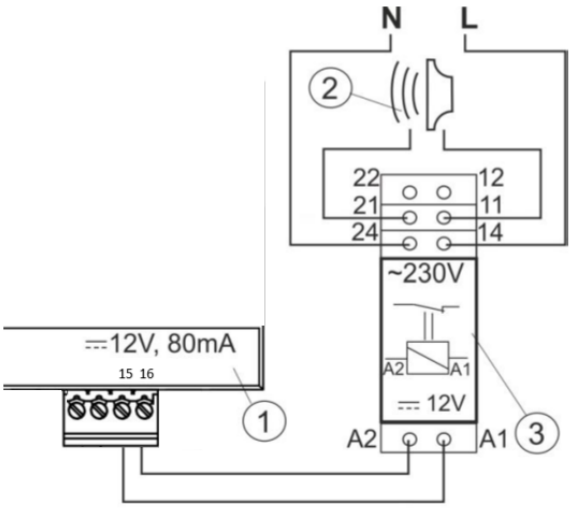

Figure 35. Connecting an external device to signal an alarm,

where: 1- controller, 2 - external alarm signaling device, 3 - relay

32.7 Circulation pump connection

It is possible to connect and control the HUW circulation pump to terminals 33-34 of the controller power module (see Figure 36).

The operation of the circulation pump is then controlled based on parameters:

Service Settings→ Boiler pump and HUW settings→ Circulation pump standstill time
Service Settings→ Boiler pump and HUW settings →Circulation pump operation time
Service Settings→ Boiler pump and HUW settings →Temperature circulating pump activation

For the circulation pump to be functional, the "Priority" or "No priority" option must be set in the HUW pump mode (see section 14.2).

32.8 Connecting the STB emergency thermostat

The STB mechanical emergency thermostat is connected to terminals 38-39 of the controller's power module. The temperature sensor (capillary) must be located in the boiler heat exchanger sump (together with the boiler temperature sensor). The STB emergency thermostat will disconnect the exhaust fan supply contacts when the boiler temperature reaches approximately 98°C.
To restore functionality, it is necessary to let the boiler cool down, then unscrew the cap on the upper wall of the controller cabinet (marked with the letters STB) and press the reset button with a suitable object. Finally screw the cap back on.

32.9 Solar connection

All elements related to the SOLAR function are connected to module P of the controller.

The solar temperature sensor is connected to terminals 90-91 of module P of the controller (see Figure 37).
The solar pump power supply wires are connected to terminals 102-109 of the controller's P module (see Figure 36).
The solar pump PWM signal wires are connected to terminals 94-95 of the controller's P module (see Figure 37).

32.10 Connection of the air supply ventilation flap to the boiler room

The controller works with the AFRISO Air Control ventilation flap with an air supply cross-section of 150 cm². It is not included in the basic boiler equipment, but BLAZE HARMONY s.r.o. offers it as an accessory.

It is connected in the controller to module P to terminals 96-99 (see Figure 36).

32.11 Connecting other peripherals

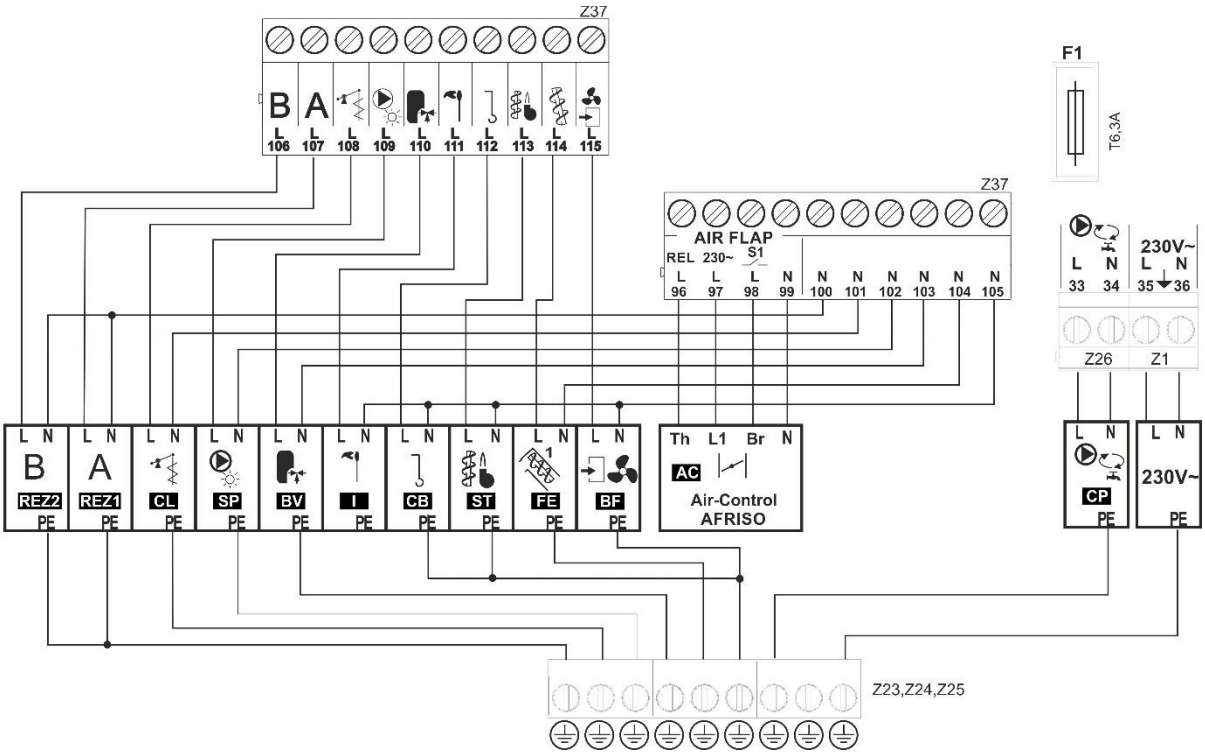

Figure 36. Connecting other peripherals 1

REZ2 - reserve output 2
REZ1 - reserve output 1
CL - cleaning the heat exchanger
SP - solar pump
BV - switching valve for charging accumulation
I - ignition
CB - rotary burner cleaning
ST - feeder 2 (in the burner) - NOT USED
FE - feeder 1 (from tray)
BF - fan in the burner
AC - boiler room air inlet damper
CP - HUW circulation pump
230V~ - 230 VAC mains power supply

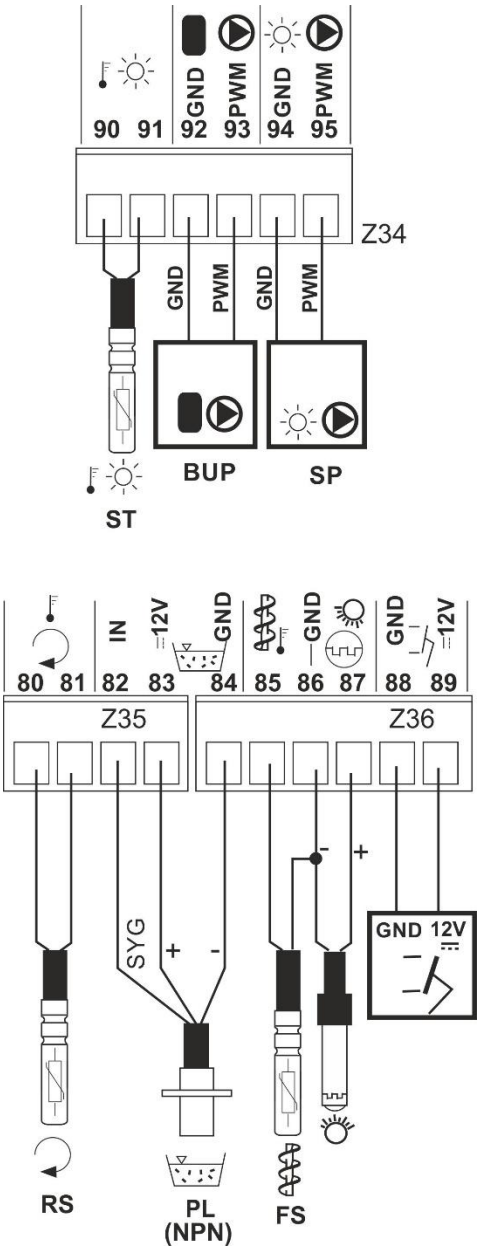

Figure 37. Connecting other peripherals 2

ST - solar cell temperature sensor
BUP - PWM output of the accumulation pump
SP - PWM output of the solar pump
RS - reverse temperature sensor (CT10)
PL - fuel level sensor in the tank
FS - burner temperature sensor
86-87 - optical sensor
88-89 - fan flap in burner

33 Service settings

33.1 Structure of the service menu

Burner auto activation

Wood Gasification settings

- Firing up exhaust fan power
- Embers maintenance exhaust fan power
- Air flush time in maintenance
- Maintenance time
- Embers maintenance interval time
- Max. refill time
- Refill exhaust fan power
- Minimal OPERATION time
- MIN exhaust fan power
- MAX exhaust fan power
- Preview time
- Stepper motor steps

- **Burner settings**
  - FIRE UP
    - Ignition test time
    - Fuel dose
    - Flame detection
    - Firing-up airflow
    - Firing-up time
    - Blowing after firing up
    - Incandescence time
    - Heating up time
    - Worktime with minimal power
  - OPERATION
    - Feeding cycle time
    - Fuel calorific
    - Capacity of tank
    - Feeder 2 extended operation
    - Feeder multiplier
    - RPM Sensor (Correction)
    - MAX fan ouput
    - MED fan output
    - MIN fan output
    - Fan work detection
    - Fan RPM Multiplier
  - BURNING OFF
    - Maximum time of burning off
    - Minimum time of burning off
    - Air flush intensity
    - Blowing time
    - Blowing pause
    - Blowing start
    - Blowing stop
  - CLEANING
    - Cleaning time FIRE-UP
    - Cleaning time BURNING OFF
    - Cleaning blowing
  - SUPERVISION
    - Supervision time
    - Cycle time
    - Fan output
    - Boiler output in Supervision mode
  - Fuel shortage detection time
  - Operation time of external feeder
  - Exhaust fan in pellet mode
    - MAX exhaust fan output
    - MED exhaust fan output
    - MIN exhaust fan output
    - FIRE UP exhaust fan output
    - Exhaust fan output after firing up
    - Exhaust fan power in burning off
    - Exhaust fan in cleaning
    - Exhaust fan output in Supervision

Boiler settings

- Lambda sensor
- Max. Preset boiler temperature
- Boiler cooling temperature
- Boiler temperature correction
- Parameter A Fuzzy Logic
- Parameter B Fuzzy Logic
- Parameter C Fuzzy Logic

Boiler pump and HUW settings

- Boiler pump start temp (water)
- Boiler pump start temp (flue gas)
- Anti-freeze temperature
- Min. HUW preset temperature [1)]
- Max. HUW preset temperature [1)]
- Boiler inc. by HUW, Mixer[1)]
- Extending HUW pump operation time [1)]
- HUW source [1)]
- Circulating pump standstill time [1)]
- Circulating pump operation time [1)]
- Temperature circulating pump activation [1)]

Buffer settings

- Hydraulic system start temperature
- Hydraulic system hysteresis
- Buffer settings in wood gasification mode
    - Buffer heat dissipation activate
    - Heat dissipation temperature
    - Heat recovery hysteresis start
    - Heat recovery hysteresis stop
- Buffer settings in pellet mode
    - Loading start temperature
    - Loading end temperature
    - Loading end temperature sensor
    - Hot buffer refill point

Mixer 1-4 settings [1)]

- Mixer 1 support
- Thermostat select.
- Min. mixer 1-4 temperature
- Max. mixer 1-4 temperature
- Proportional range
- Integration time constant
- Valve full opening time
- Off by thermostat

Solar

- Mode
- Delta T pump activation
- Delta T pump deactivation
- Minimum collector temperature
- Maximum collector temperature
- Collector deactivation temperature
- Minimal pump rotations
- Anti-freeze function

Output H

- Off / Boiler / Alarm

Manual control

Ventilation flap activate

Restore defaults settings

Save settings

Service disabling

Show advanced setup

Log out of the service mode

[1)] This setting is not displayed if the corresponding sensor, expansion module or parameter is not connected or is

33.2 Description of service parameters

Description	Instructions
33.2.1 Burner auto activation	Switching on/off automatic activation of the pellet burner after the wood burns out.
33.2.2 Wood Gasification settings	
• Firing up exhaust fan power	Exhaust fan performance during boiler start-up. Too high or low power can lead to a failed fire in the boiler.
• Embers maintenance exhaust fan power	The exhaust fan is switched on for the time specified by the *Air flush time in maintenance* parameter with the power specified by the *Embers maintenance exhaust fan power* parameter to maintain the stochastic layer.
• Air flush time in maintenance	
• Maintenance time	Specifies the maximum time that the MAINTENANCE mode can last.
• Embers maintenance interval time	The interval determines how often to switch the exhaust fan in MAINTENANCE mode.
• Max. refill time	Allows you to set the application time for which the exhaust fan operates at the power given by the *Refill exhaust fan power* parameter. When the door switch function is active, the fan operates until the top door is closed and the handle is secured.
• Refill exhaust fan power	Exhaust fan power during the REFILL mode. It is recommended to have this value set to 100%.
• Minimal OPERATION time	Specifies the time of fuel detection mechanism blocking. After this time has elapsed, the condition for activating the STOP mode is met. It is also a safety parameter to prevent the exhaust fan from being switched off, e.g. during a flare-up when the boiler is low on fuel.
• MIN exhaust fan power	An important parameter affecting the correct control of the combustion process. It should be set so that the exhaust fan with this power reduces the temperature of the flue gas and the boiler. Failure to maintain this condition will result in the boiler temperature exceeding the set point. The minimum fan capacity should be determined by observation of boiler behaviour.
• MAX exhaust fan power	The parameter affects the boiler output and the speed of reaching the set boiler or flue gas temperature. It should be determined based on the desired boiler output and by monitoring the fan behaviour. Too low a value may cause the boiler to fail to achieve its rated output. Too high a value may cause the boiler to misfire and burn out.
• Preview time	*The PREVIEW* mode precedes the *REFILL* mode. If the top door of the boiler is closed and the handle secured before the *Preview time* has elapsed, the controller will evaluate this situation as no fuel has been added to the boiler and will not reset the counters. If the *Preview time* elapses before the boiler top door is closed and the handle secured, a transition to the REFILL mode follows and the run time counter is reset.
• Stepper motor steps	A parameter that determines the number of pulses the stepper motor must perform to move the sliding shutter from the fully closed position to the fully open position.
33.2.3 Burner settings	
FIRE UP	
• Ignition test time	The length of time that the controller checks if there is a flame in the burner. Only the burner fan operates. If the flame has sufficient brightness, the next step is to go directly to OPERATION mode, without FIRE UP mode.

• Fuel dose	Fuel dose for ignition. The set dose is used for the first attempt to ignite the pellets in the burner. In subsequent ignition attempts the dose is reduced to 10% of the set value.
• Flame detection	The value of the minimum flame brightness in % at which the controller evaluates that the fuel in the burner has been successfully ignited and a flame has appeared. The parameter is also used to detect fuel shortage and to exit the BURNING OFF mode.
• Firing-up airflow	Burner fan power during FIRE UP. Too high a value will prolong the ignition time or may lead to an unsuccessful ignition attempt in the burner.
• Firing-up time	Determines how long it will take to attempt ignition. After this time has elapsed, the controller initiates another ignition attempt (3 attempts in total). In the event of a failed ignition, the alarm is activated: "*Unsuccessful boiler firing-up attempt.*".
• Blowing after firing up	Fan power after successful ignition, i.e. after the flame brightness increases above the value given by the *Flame Detection* parameter.
• Incandescence time	The time of fuel burning in the burner after ignition, the fan in the burner works with the power given by the parameter *Blowing after firing up*. This phase allows a better kindling of the fireplace. During this time the fuel feeders are inactive.
• Heating up time	Determines the time of ignition of the igniter before the fan in the burner starts. It should not be too long to avoid damage to the igniter. After this time has elapsed, the igniter continues to ignite until the flame is detected or the ignition time has elapsed.
• Worktime with minimal power	After ignition, the burner operates at minimum power for the time set by this parameter to ensure sufficient ignition.
OPERATION	
• Feeding cycle time	Time of the entire fuel feed cycle (feeding period) in OPERATION mode. Feeding period = feeder running time + feeder pause time.
• Fuel calorific	The parameter *Fuel calorific* is used by the controller to calculate the running time of the feeder to ensure the desired burner performance. It is given in units of kWh/kg. For common wood pellets it ranges from 4.7 to 5.2 kWh/kg. (CAUTION: Do not confuse with MJ/kg units.)
• Capacity of tank	The parameter *Capacity of tank* is used by the controller to calculate the fuel level in the tank. If the correct value is set, the user does not have to perform the procedure of calibrating the fuel level in the tank. If a fuel level calibration has been performed (see chapter 13.6), the controller does not use this value.
• Feeder 2 extended operation	Burner feeder run time extension as a function of the tank feeder run time.
• Feeder multiplier	Allows you to increase the range of the specified amount of grams of fuel when calibrating the feeder. Used on long feeders equipped with faster drives. To view this parameter, the "Show advanced setup" function must be activated.
• RPM Sensor (Correction)	The range of correction of the burner fan power based on the values from the speed sensor (Hall probe) for a given burner power.
• MAX fan output • MED fan output • MIN fan output	Set fan speed (in rpm) in the burner for maximum, medium and minimum burner output.
• Fan work detection	The minimum speed below which the "*Fan or rotation sensor demage.*" alarm is activated.
• Fan RPM Multiplier	Multiplier for burner fan speed.
BURNING OFF	

• Maximum time of burning off	After this time has elapsed during the BURNING OFF mode, the boiler switches to STOP mode even if the optical sensor still detects a flame in the fireplace.
• Minimum time of burning off	The BURNING OFF mode will last for at least this time, even if the optical sensor no longer detects the flame in the fireplace.
• Air flush intensity	Determines the power of the burner fan during the BURNING OFF mode.
• Blowing time	The duration of the burner burnout during the fuel burn-up during BURNING OFF mode.
• Blowing pause	The time delay between purges during the fuel burn-up during BURNING OFF mode.
• Blowing start	The flame brightness at which purges are initiated during fuel burn-up during BURNING OFF mode.
• Blowing stop	The flame brightness at which the purges are terminated during the burning out of the fuel during BURNING OFF mode.
CLEANING	
• Cleaning time FIRE-UP	Burner cleaning time (combustion chamber rotation and fan blowing) before the ignition mode. It is used to remove fuel residues and ash from the burner combustion chamber.
• Cleaning time BURNING OFF	Burner cleaning time (combustion chamber rotation and fan blowing) after the BURNING OFF mode. It is used to remove fuel residues and ash from the burner combustion chamber.
• Cleaning blowing	Determines the burner fan output during the CLEANING mode.
SUPERVISION	
• Supervision time	After this time has elapsed during the SUPERVISION mode, the boiler will automatically start the burner BURNING OFF process. If the parameter *Supervision time =* 0, this function is disabled.
• Cycle time	The time of the entire fuel feed cycle (feed period) in the SUPERVISION mode. Feeding period = feeder running time + feeder pause time.
• Fan output	Determines the burner fan output during the SUPERVISION mode.
• Boiler output in Supervision mode	Determines the burner output during the SUPERVISION mode. The value of this parameter must be reasonably small but sufficient to maintain the flame. Too high a value can lead to overheating of the boiler.
Fuel shortage detection time	It is the time counted down after the flame brightness drops below the *Flame Detection %* value. After this time has been counted down, the controller initiates ignition attempts. After 3 unsuccessful attempts, it issues a "*Unsuccessful boiler firing-up attempt.*" alarm.
Operating time of external feeder	Determines the running time of the external feeder (from the bunker) after a low fuel level in the tank is detected (sensor contacts open). The feeder is connected e.g. to terminals 106 or 107. It is also necessary to connect a capacitive sensor to terminals 82-84. When the fuel level in the tank drops, the external feeder is activated and operates for the time set by this parameter.
Exhaust fan in pellet mode	
• MAX exhaust fan output	The parameters define the performance of the exhaust fan in the OPERATION mode of the pellet burner. These parameters are analogous to those of the push fan in the burner. It is recommended not to change the preset values.
• MED exhaust fan output	
• MIN exhaust fan output	
• FIRE UP exhaust fan output	The parameters define the performance of the exhaust fan in other operating modes of the pellet burner. These parameters are analogous to those of the pressure fan in the burner. It is recommended not to change the preset values.
• Exhaust fan output after firing up	
• Exhaust fan power in burning off	
• Exhaust fan in cleaning	

• Exhaust fan output in Supervision	
33.2.4 Boiler settings	
Lambda sensor	Activating/deactivating the use of the lambda sensor.
Max. Preset boiler temperature	This is the maximum value of the *Maximum boiler temperature* that can be set: • user in the main menu • the controller automatically, e.g. with active equithermal control, etc.
Boiler cooling temperature	This parameter determines at what boiler temperature the boiler cooling is activated. When the boiler is cooling, all heating circuits are switched on, regardless of the room thermostat status, and the mixing valves are fully open. In the case of *Mixer support = Floor on*, the Mixer is not open 100%, but the temperature is regulated to prevent damage to the underfloor heating. The HUW tank will be charged to the temperature set by the *Max. HUW preset temperature* parameter.
Boiler temperature correction	The parameter allows to correct the displayed boiler temperature against a more accurate thermometer.
Parameter A Fuzzy Logic Parameter B Fuzzy Logic Parameter C Fuzzy Logic	The parameters affect the speed of boiler temperature control to the setpoint and the stability of maintaining the setpoint boiler temperature in Individual Fuzzy Logic mode. These parameters do not affect the combustion quality in Individual Fuzzy Logic mode, as this quality is controlled automatically. It is not recommended to change these parameters if the boiler power change rate is at the expected level. Increasing the value will increase the rate of increase in boiler output. The higher the value is set, the faster the boiler temperature approaches the setpoint. Too high a value may cause instability in maintaining the set temperature boilers. To display this parameter, you must activate the "Show advanced setup" function.
33.2.5 Boiler pump and HUW settings	
Boiler pump start temp (water)	Determines at what boiler temperature the boiler pump should be started. At the same time the flue gas temperature must be reached.
Boiler pump start temp (flue gas)	Determines at which flue gas temperature the boiler pump should be started. At the same time, the boiler water temperature must be reached.
Anti-freeze temperature	If the boiler temperature drops below the value of this parameter, the boiler pump will switch on. Circulation of the boiler water helps to slow down the freezing process in the heating system. However, if the temperature is too low or the power supply fails, it is not possible to prevent the water from freezing.
Min HUW preset temperature	A parameter that prevents the user from setting the desired HUW temperature too low.
Max HUW preset temperature	This parameter sets the maximum temperature to which the HUW tank is heated during the removal of excess heat from the boiler or storage tank in an emergency overheating situation. This is a very important parameter where setting the temperature too high can lead to scalding of the user. Too low a parameter value will result in the boiler not being able to dissipate excess heat to the HUW storage tank during an overheating event. When designing the installation of the HUW storage tank, it is necessary to take into account that damage to the controller may occur. As a result of such a failure, the water in the HUW cylinder may heat up to a high

	temperature and this may cause scalding of the user. Therefore, an additional thermostatic valve should be installed.
Boiler inc. by HUW Mixer	The parameter determines by how much °C the desired boiler temperature will be raised in order to heat the HUW tank and provide the required output for the mixed circuit. However, this will only be done if necessary. If the boiler temperature set point is high enough, the controller will not change it due to the need to heat the HUW tank or the mixed circuit.
Extending HUW pump operation time	The parameter is available after connecting the HUW sensor. When the HUW tank is charged and the HUW pump is switched off, the boiler may overheat. This risk arises when the *HUW preset temperature* parameter is set to a higher value than the *Maximum boiler temperature.* The problem mainly concerns the operation of the HUW pump in SUMMER mode when the boiler pump is switched off. In order to cool down the boiler, the operation of the HUW pump is extended by the *Extending HUW pump operation time* value.
HUW source	Allows selection of the HUW heating temperature source. By setting "Boiler", the HUW pump is switched based on the boiler temperature. The "Buffer" setting switches the HUW pump based on the temperature in the Buffer tank.
Circulating pump standstill time	This parameter determines how long the HUW circulation pump should be switched off after the *Circulating pump operation time* parameter has expired.
Circulating pump operation time	This parameter determines how long the HUW circulation pump should operate after the activation temperature in the HUW tank is reached.
Temperature circulating pump activation	When the temperature set in this parameter is reached, the HUW circulation pump is switched on. Attention, the circulation pump can be blocked by the set time program. The HUW circulation pump operates in cycles *Circulating pump operation time* and *Circulating pump standstill time.*
33.2.6 Buffer settings	
Hydraulic system start temperature	The temperature in the storage tank at which the mixed heating circuits and HUW will be switched on/off if storage is selected as the heat source.
Hydraulic system hysteresis	Temperature hysteresis of the hydraulic system for the storage tank.
Buffer settings in wood gasification mode	
• Buffer heat dissipation activate	Switches the heat removal function of the storage tank on or off.
• Heat dissipation temperature	The temperature of the upper sensor of the storage tank at which cooling of the tank is initiated, when the heat is discharged to the heating and HUW circuits.
• Heat recovery hysteresis start	These parameters determine the temperature differences between the storage tank and the boiler at which the boiler pump will be switched off/on. Setting the *Heat recovery hysteresis stop* parameter = 0 will disable the storage tank cool-down protection function.
• Heat recovery hysteresis stop	
Buffer settings in pellet mode	
• Loading start temperature	The temperature at the upper temperature sensor of the Buffer tank at which the pellet burner will be put into operation. Burner operation in SUMMER mode – see Chapter 15.
• Loading end temperature	The temperature at the middle or lower temperature sensor of the Buffer tank at which the pellet burner will stop operating. Burner operation in SUMMER mode – see Chapter 15.
• Loading end temperature sensor	Determination of the sensor (middle or lower) of the temperature of the Buffer tank, which will be decisive for the shutdown of the pellet burner.
Hot buffer refill point	Activation of the "DO NOT REFILL" warning depending on the level of heating of the storage tank.

	If the function is active, the text "*Do not refill! Check buffer temperature!*" with an acoustic signal. The factory value for displaying the warning is set to 70%.
33.2.7 Mixer 1-4 settings	
Mixer 1-4 support	The following options can be set: • **Off** – Mixer actuator and Mixer pump are not working. • **CH on** – used when the mixed heating circuit is connected to radiators. The maximum temperature of the mixed circuit is not limited. The Mixer is fully open during boiler heat extraction (when the boiler overheats). Caution: do not switch on this option if the installation is made of pipes that cannot withstand high temperatures. In this case it is recommended to select the *Floor on* option in the Mixer settings. • **Floor on** – used when the mixed heating circuit is connected to an underfloor installation. The maximum temperature of the mixed circuit is limited by the *Max. mixer 1-4 temperature* parameter. Caution: when selecting the *Floor on* mode, the *Max. mixer 1-4 temperature* parameter must be set avoid thermal damage to the underfloor installation and risk of burns. • **Air heater** – applies only to Mixer 1. When this option is selected, the Mixer 1 main menu will display functions related to controlling the forced-air unit.
Thermostat select	This option allows you to define the type of thermostat used for the mixed heating circuit. The following options can be set: • **Off** – no heating circuit thermostat is active • **Universal** – standard thermostat connected to terminals 11-12 on the left wall of the controller cabinet • **eSTER** – room thermostat eSTER If eSTER is not connected, the controller works with a standard thermostat.
Min. mixer 1-4 temperature	Parameter that prevents the user from setting the Mixer temperature too low. If the desired Mixer temperature is lower (e.g. due to a reduction from the time program) than the *Min. mixer 1-4 temperature*, the controller will accept the *Min. mixer 1-4 temperature* as the desired temperature.
Max. mixer 1-4 temperature	It is a parameter that prevents the user from setting the Mixer temperature too high. The controller accepts the temperature set by the *Max. mixer 1-4 temperature* parameter as the desired temperature if the result of the calculation of the desired temperature according to the outdoor sensor and the equithermal curve exceeds the value set by the *Max. mixer 1-4 temperature* parameter. For underfloor heating it is necessary to set a value no greater than 45°C - 50°C (or other, if specified by the manufacturer of the material for underfloor heating installation or the designer of the heating system).
Proportional range	This parameter affects the amount of movement of the Mixer actuator. Increasing this parameter causes the Mixer temperature to reach the *Preset mixer 1-4 temperature* faster, but too high a value causes temperature over-regulation and unnecessary Mixer actuator movements. To display this parameter, you must activate the "Show advanced setup" function.
Integration time constant	This parameter affects the speed of the Mixer actuator. The larger the value, the slower the actuator response to temperature variations. Setting the value too low may cause unnecessary movements of the Mixer actuator. Too

	high a value increases the time to find the *Preset mixer 1-4 temperature* value. To display this parameter, you must activate the "Show advanced setup" function.
Valve full opening time	Enter the time of full valve opening. It is indicated on the valve actuator nameplate, e.g. 140 sec.
Off by thermostat	The following options can be set: • **No** – the Mixer pump does not switch off when the room thermostat is switched off. • **Yes** – the moment the room thermostat is turned off, the Mixer pump shuts down and the Mixer closes.
33.2.8 Solar	
Mode	• **Off** – no solar mode is active. • **On (DHW)** - activation of the function of charging the HUW tank using solar energy. • **On (Buffer)** - activation of the function of charging the storage tank using solar energy.
Delta T pump activation	The temperature difference between the solar panel temperature and the temperature of the control sensor (HUW or storage) at which the solar panel pump is switched on.
Delta T pump deactivation	The temperature difference between the solar panel temperature and the temperature of the control sensor (HUW or storage) at which the solar panel pump switches off.
Minimum collector temperature	Below this solar panel temperature, the solar pump will not switch on.
Maximum collector temperature	Above this solar panel temperature, the solar pump turns on to cool the panel. If the temperature in the HUW tank reaches the value set by the *Max HUW preset temperature* parameter, the HUW tank will stop charging.
Collector deactivation temperature	Above this solar panel temperature, the solar pump will be switched off to prevent damage to the solar panel. The pump will be switched on again when the solar panel has cooled down.
Minimal pump rotations	This parameter determines the minimum speed of the solar pump when the solar panel temperature is close to the storage tank temperature.
Anti-freeze function	This parameter determines the temperature of the solar panel at which the frost protection function is activated.

33.2.9 Output H	It allows to activate the 12V DC output on terminals 15-16 of the controller's power module. The following options can be set: **Off** – output H is inactive. **Boiler** – output H switches the reserve boiler on/off (chap. 32.5). **Alarm** – when the alarm is activated, the contact on output H is switched (chap. 32.6).
33.2.10 Manual control	Menu in which it is possible to manually activate individual controller outputs. It requires switching off the controller to STAND BY mode. Never switch off the controller when the boiler is in operation.
33.2.11 Ventilation flap activate	• **Off** – the ventilation flap function for supplying air to the boiler room is switched off. • **On** – activation of the ventilation flap function for supplying air to the boiler room. If the flap is damaged, the *Ventilation flap error* alarm appears on the display, but the boiler continues to operate according to the set requirements. • **On + alarm** – activation of the ventilation flap function for air supply to the boiler room. If the flap is damaged, the *Ventilation flap error* alarm appears on the display, an audible signal sounds continuously, and the boiler is shut down.
33.2.12 Restore defaults settings	Restores the factory settings of the service menu.
33.2.13 Service disabling	This is a service intervention, when the burner is immediately switched off without the BURNING OFF and CLEANING mode. This method of burner shutdown can only be performed by a trained authorized service technician. It is forbidden to switch off the burner in this way during normal boiler operation.
33.2.14 Show advanced setup	• **ON** – Displays advanced parameters that are not recommended to be displayed in the normal state. • **OFF** – hides advanced parameters.
33.2.15 Log out of the service mode	Allows you to exit the service settings with immediate expiration of the service password.

34 Replacement of spare parts and components

When ordering spare parts and components, it is necessary to provide the necessary information that can be found on the controller's nameplate, ideally the serial number of the controller. If the serial number is missing, please specify the model, controller version and year of manufacture.

The serial number of the controller is located on the controller switchboard and power module. The control panel number is not the serial number of the controller.

35 Description of possible malfunctions

Description	Instructions
The display does not show anything even if the controller is plugged into the .	Check: • check that the fuse is not blown or replace it. • that the cable for connecting the unit's control panel is properly connected and not damaged.
The desired boiler temperature on the display is different from the programmed temperature.	Check: • if the HUW tank is not heating and the set HUW temperature is higher than the boiler temperature. If so, the difference will disappear when the HUW tank is charged or the desired HUW temperature is lowered. • if a room thermostat is connected, set the parameter *Room thermostat mixer 1-4* to ,,0" (if available). • if time programs are active, disable the boiler time programs (if available).
The boiler pump is not working.	Check: • whether the boiler has reached the value given by the parameter *Boiler pump start temperature* (water and flue gas) and whether the pump is not blocked by setting the parameters of the storage tank. • that the pump is correctly connected, damaged or blocked.
The fan is not working.	Check: • whether the STB emergency thermostat has been activated. If so, it must be manually unlocked by unscrewing the boiler cap and pressing the reset button after the boiler has cooled down. • that the connector is properly connected and that it is properly inserted into the connector on the fan. • Check and replace the fan if necessary.
The temperature is not being measured correctly.	Check: • whether there is good thermal contact between the temperature sensor and the surface to be measured. • that the sensor wire is not placed too close to the power cable. • whether the sensor is correctly connected to the terminals in the controller cabinet. • if the sensor is damaged, or replace it.
The boiler overheats even when the fan is switched off.	• The cause may be insufficient heat extraction or a small storage tank.
In the Mixer information, the % indicator does not match the actual valve position	• Wait for the Mixer to calibrate itself or calibrate it manually.

36 Notes

BLAZE HARMONY s.r.o.

Trnávka 37, 751 31 Lipník nad Bečvou

Czech Republic

E-mail: info@blazeharmony.com, www.blazeharmony.com

Date of last revision: 2026-10-19