BOILER OPERATING
AND INSTALLATION MANUAL

BLAZE HARMONY 12 LAMBDA

BLAZE HARMONY 18 LAMBDA

BLAZE HARMONY 25 LAMBDA

BLAZE HARMONY 33 LAMBDA

BLAZE HARMONY s.r.o.
Trnávka 37, 751 31 Lipník nad Bečvou
Czech Republic
www.blazeharmony.com

Dear Customer,

Congratulations on choosing and purchasing a BLAZE HARMONY LAMBDA boiler. You are now the owner of a boiler with top-of-the-line specifications. To ensure that your boiler serves you well, reliably, and for a long time, please operate it in accordance with the instructions in the user manual, paying particular attention to chapters 6, 7, and 8.

We greatly appreciate the trust you have placed in us and would appreciate your feedback regarding the operation and use of the boiler.

In accordance with Government Regulation No. 176/2008 Coll., Annex 1, Section 1.7.4, this is

ORIGINAL INSTRUCTION MANUAL.

Copyright 2017 BLAZE HARMONY s.r.o.

All rights reserved.

All text and images are subject to copyright and other intellectual property protections.

Printing errors reserved.

1 Boiler usage and advantages 5
1.1 Advantages of the boiler 5
1.2 Advantages of the Boiler 6
1.3 General Conditions for Installation and Operation of the BLAZE HARMONY LAMBDA 6
2 Technical Specifications of the Boiler 7
3 Recommended fuels for the boiler 8
4 Boiler Description 9
4.1 Boiler Design 9
4.2 Function Description 10
4.3 Boiler dimensions 11
4.4 Boiler diagram 14
5 Boiler Assembly and Installation 17
5.1 Quality and completeness check 17
5.2 Dismantling the boiler for relocation to the boiler room 17
5.3 Disassembling the shipping pallet 18
5.4 Handling the boiler 19
5.5 Boiler placement in the boiler room 20
5.6 Installation of the exhaust fan 21
5.7 Installation and Operation of the Lambda Probe 21
5.8 Connection to the Chimney 22
5.9 Ensuring Air Supply to the Boiler 23
5.10 Heating system design, connection of the boiler 24
5.10.1 Integrated mixing system 24
5.10.2 Input and Output Connections 24
5.10.3 Storage Tank Size 24
5.10.4 “Boiler–storage tank” connection with gravity circulation (without a pump) 25
5.10.5 “Boiler – storage tank” connection with forced circulation (with pump) 26
5.10.6 Residual boiler output 26
5.10.7 The most suitable method for dissipating residual heat 26
5.10.8 Other methods of dissipating residual heat 26
5.10.9 Water 27
5.10.10 Open expansion tank 27
5.10.11 Connecting the Boiler to the Existing System 27
5.10.12 Boiler connection with a storage tank 27
5.10.13 Gravity-fed valves BLAZE HARMONY 27
5.11 Hydraulic connection diagrams 29
5.11.1 Connection diagram No. 1 – gravity-fed connection with storage tank 30
5.11.2 Wiring Diagram No. 2 – Combined System with Storage Tank and Injector 31
5.11.3 Wiring diagram No. 3 – forced connection with storage tank 32
5.11.4 Wiring Diagram No. 4 – Forced connection with a thermostatic mixing valve, storage tank, and emergency cooling 33
5.12 Automatic cooling connection 34
5.13 Electrical connection 34
6 Boiler Operation by the User 35

6.1 Initial Start-up 35
6.2 Firing Up 35
6.3 Fueling 37
6.4 Amount of fuel added, refueling intervals 38
6.5 Setting the Desired Output 39
6.6 Auto embers maintenance 39
6.7 Combustion Control with Lambda Probe 40
6.8 Boiler Cleaning 41
6.9 Taking the Boiler Out of Service 45
6.10 Operational Inspection and Maintenance 45
6.11 Poor combustion, frequent operating errors 46
7 Possible faults and their solutions 46
7.1 Boiler overheating 46
7.2 Power Outage During Operation 47
7.3 Fault in flue gas oxygen control 47
7.4 Boiler operation without electricity 49
7.5 Other faults and their solutions 49
8 Further information 51
8.1 Properties of Different Types of Fuel 51
8.2 Fuel consumption, frequency of stoking 52
8.3 Heat loss from a building, methods for determining it 52
9 Safety Instructions 53
10 Disposal of shipping packaging 54
11 Disposal of the boiler at the end of its service life 54
12 Related standards 55
13 Warranty Terms 56
14 WARNING! 57
15 Record of repairs performed 58

1 Boiler usage and advantages

1.1 Advantages of the boiler

Low investment costs

- The boiler features **a patented integrated mixing system** that replaces the standard return water protection (return line); a mixing circuit with temperature control (e.g., Laddomat type) is not required.
- The boiler can be connected to a storage tank in a gravity-fed system. In this case, a pump and an emergency cooling system are not required.
- Excellent output controllability and long-term maintenance of a constant temperature allow for the same thermal and operational comfort even with a storage tank half the volume of what is required for boilers without controllability.

Low operating costs

- The automatic temperature control and lambda probe regulate boiler operation according to the combustion conditions. Boiler efficiency and fuel consumption under defined test conditions are specified in Table 3.
- Electricity savings in gravity-fed systems (without a pump or electric mixing valves).
- Savings on service and maintenance – advanced design features (e.g., split refractory linings made of high-quality ceramics, water-cooled combustion chamber ceiling, double sealing cords, etc.) ensure low costs for wear-and-tear parts.

High-quality combustion

- The unique design of the combustion chamber and **the patented 3-zone air system** enable the efficient combustion of fuels of varying sizes.
- The lambda probe ensures an optimal residual oxygen level in the flue gases, enabling ideal combustion.
- The boiler features a unique stoking chamber design with a compact insulating jacket. This prevents excessive cooling of the fuel, ensuring high-quality combustion even at low output and with fuels containing a higher moisture content.
- The controller evaluates the instantaneous output (based on flue gas and water temperatures) and maintains it within the optimal combustion range.

Long service life

- Wood gasification produces organic acids (acetic acid, etc.). In conventional boilers (made of steel sheets or cast iron), these acids condense on the walls of the firebox and cause chemical corrosion, which significantly shortens the service life. The compact insulating jacket of the combustion chamber completely eliminates this problem; the jacket walls have a higher temperature, so condensation does not occur. The service life of boilers of this design is significantly longer than that of wood-fired boilers without similar protection.
- The integrated water mixing system ensures that the water temperature in the boiler during operation is higher than the dew point of the flue gases (approx. 50°C). This protects the internal heat exchange surfaces from low-temperature corrosion.
- The lambda probe extends the boiler's service life (as combustion quality improves, the amount of corrosive substances in the flue gases decreases).

User Comfort

- **Patented smoldering layer detection** accurately and reliably determines when the residual fuel layer is optimal for switching to smoldering standby mode. This ensures maximum time for the next fuel addition without the need for a new fire. If the fire does go out, an ideal ignition layer of charcoal remains in the boiler, which only needs to be lit (e.g., with a piece of paper) and then refueled. The need for routine reignition (i.e., removing ash from the stoking chamber and reigniting with wood chips) is thus completely eliminated during operation.
- Thanks to the lambda probe, the operator does not need to adjust the air ratio, and there is less buildup in the boiler and chimney.

- A sophisticated controller manages the heating system, DHW heating, etc. It allows for remote access (via the internet), etc.
- There is no need to remove ash from the bottom of the stoking chamber. Ash continuously slides into the combustion chamber.
- Due to the high-quality combustion, ash removal is usually only necessary after 1 to 2 weeks of operation.
- Mechanical turbulators allow for easy and quick cleaning of the heat exchanger using a lever.
- The fan prevents smoke from filling the boiler room during stoking and firing, and reduces dust during ash removal and boiler cleaning.
- The insulation jacket of the stoking chamber ensures higher wall temperatures, preventing liquid tar from settling on the walls.
- A viewing window with ceramic glass allows the operator to easily monitor the combustion process.
- The boiler can be operated in emergency mode even during a power outage, relying solely on chimney draft (see Section 7.4).

1.2 Advantages of the Boiler

The BLAZE HARMONY LAMBDA series of hot-water gasification boilers are designed for heating single-family homes, apartment units, cottages, office buildings, small businesses, and other structures. The boilers may only be installed with a storage tank of the appropriate capacity (see Section 5.10.3).

Operation in an installation where the connection and operating conditions specified in this document are not met will void the boiler warranty.

BLAZE HARMONY LAMBDA series boilers are manufactured and tested in accordance with applicable documentation and comply with the EN303-5:2022 standard for central heating boilers.

1.3 General Conditions for Installation and Operation of the BLAZE HARMONY LAMBDA

Operation of the BLAZE HARMONY LAMBDA boiler is only possible in an installation where (points 1–5):

1. **The condition for maximum heat output is met:** The heat loss of the boiler-heated part of the building must not exceed the value in Table 1, so that during very cold periods (average daily temperature below -5°C … approx. 20 days per year), it is sufficient to add 4 full fuel loads per day.

Table 1: Maximum heat loss of a building where BH LAMBDA is the sole heating source

BH12 LAMBDA (70-liter firebox capacity)	**Maximum heat loss of the building (kW)**	Weight of a full load of fuel (kg)**
Briquettes	**20**	30
Hardwood (beech, hornbeam, acacia, etc.)**	**18**	22
medium (birch, mixed)**	**14**	17
softwood (spruce, poplar, etc.)**	**12**	9

BH18 LAMBDA (fuel chamber volume 100 L)	**Maximum heat loss of the building (kW)**	Weight of a full load of fuel (kg)**
Briquettes	**27**	40
Hardwood (beech, hornbeam, acacia, etc.)**	**24**	30
medium (birch, mixed)**	**17**	20
softwood (spruce, poplar, etc.)**	**15**	17

BH25,33 LAMBDA (fuel chamber volume 150 L)	**Maximum heat loss of the building (kW)**	Weight of a full load of fuel (kg)**
Briquettes	**40**	60
Hardwood (beech, hornbeam, acacia, etc.)**	**35**	44
medium (birch, mixed)**	**30**	36
softwood (spruce, poplar, etc.)**	**25**	27

** Applies to standard firewood, i.e., mostly standard, regular logs with smooth ends, lengths of 25, 33, and 50 cm (depending on the boiler type). Irregular firewood (various lengths, curved, logs with prominent branch protrusions, woodworking scraps, etc.) has poorer filling capacity and therefore needs to be stoked 1.2x–1.5x more frequently. For irregular firewood, the maximum heat loss for the given boiler must be divided by a factor of 1.2–1.5 (to avoid having to stoke more than 4 times a day).

It is assumed that fuel is added to a steady-burning layer (approx. 15% of the volume).

2. **The installation is properly performed (hydraulic connections, flue gas exhaust, electrical wiring, etc.).**
3. **The fuel is suitable (e.g., logs of the correct length, appropriately split, dry).**
4. **Operation is correct (starting the fire, feeding, adjusting control elements, ash removal and cleaning, inspection).**
5. **Is the boiler and related equipment (flue, heating system, etc.) in good working order?**

2 Technical Specifications of the Boiler

Table 2. Boiler dimensions and technical specifications

Boiler type		**BH12 LAMBDA**	**BH18 LAMBDA**	**BH25 LAMBDA**	**BH33 LAMBDA**
Weight	kg	350	400	550	
Water tank capacity	l	45	50	60	
Flue diameter	mm	150			
Firing chamber volume	dm^3	70	100	150	
Boiler dimensions	mm	see section 4.3			
Firing opening dimensions	mm	365 x 250		548 x 250	
Maximum fuel length	mm	330		500	
Maximum allowable operating pressure	bar	3.0			
Test pressure for type testing	bar	6.0			
Outlet water temperature control range	°C	70 - 95			
Maximum permissible operating temperature	°C	95			
Boiler hydraulic loss at ΔT = 20 K	mbar	0.2	0.3	0.5	0.8
Maximum noise level	dB	55			
Minimum operating draft of the chimney [1)]	mbar Pa	0.10 10			
Boiler connections: - heating water	Js	G 6/4”			
- return water	Js	G 6/4”			
Connection voltage		1 PEN ~230V / 0.5A / 50 Hz			
Environment		Basic AA5 / AB5			
Electrical protection		IP 20			
Energy efficiency class		A+			

Table 3. Thermal specifications of the boiler

Boiler type		**BH12 LAMBDA**	**BH18 LAMBDA**	**BH25 LAMBDA**	**BH33 LAMBDA**
Rated output	kW	15.5	20	25	31
Wood consumption at rated output	$kg \cdot h^{-1}$	4.3	5.5	6.2	7.6
Burning time of a full load of wood					
- at rated output during certification	h	2	2	2	2
- during normal boiler operation	h	2–6	2–6	3–6	2–6
Boiler class according to ČSN EN 303-5		5			
Ecodesign		Yes			
Flue gas temperature at rated output [2]	°C	135	135	135	145
Efficiency at rated power	%	89.5	89.5	89.6	89.6
Exhaust gas mass flow rate at the outlet at rated power	$kg \cdot s^{-1}$	0.011	0.015	0.019	0.023
Maximum electrical power consumption	W	75	75	75	75
Power consumption at rated output	W	43	49	60	67
Power consumption in standby mode	W	3	3	3	3
Required storage tank capacity [3]	l	700–1,500	1000–2000	1,500–3,000	1500–3000
Boiler operating mode		Non-condensing			
Boiler category		1			

[1] Chimney requirements are described in Section 5.8

[2] Applies to a clean heat exchanger (with normal fouling, the flue gas temperature is approximately 10 to 20°C higher)

[3] The determination of the storage tank volume is described in Chapter 5.10.3

[4] The determination of the building's heat loss is described in Chapter 8.3

3 Recommended fuels for the boiler

The fuel specified in the table below is the certified fuel for the BLAZE HARMONY LAMBDA boiler. This is the fuel used during the boiler's certification.

Table 4. Guaranteed fuel for the BLAZE HARMONY LAMBDA boiler

Fuel type		**Wood**
Diameter	[mm]	max. 150
Length	[mm]	330 [1] / 500 [2]
Water content	[%]	max. 20
Ash content	[%]	max. 1.5
Calorific value	[MJ/kg]	min. 14

[1] applies to BH12 LAMBDA and BH18 LAMBDA

[2] applies to BH25 LAMBDA and BH33 LAMBDA

The fuel must comply with the requirements of the EN ISO 17225-5 (wood) standards.

WARNING! Unsuitable fuel can significantly negatively affect the boiler's performance and emission parameters.

For more useful information on fuel, see Chapter 8.

4 Boiler Description

4.1 Boiler Design

The boiler design complies with the requirements of:

EN 303-5:2022 - Central heating boilers – Part 5: Solid fuel central heating boilers with manual or automatic feeding, with a rated thermal output not exceeding 500 kW – Terminology, requirements, testing, and marking.

The BLAZE HARMONY LAMBDA boiler is based on the principle of two-stage combustion, in which fuel gasification occurs followed by the combustion of the resulting gases.

The boiler body (5) is welded from steel sheets 4 and 5 mm thick. The walls of the stoking chamber (1) are fitted with a steel protective shell (6) consisting of several segments connected by interlocking joints. In the lower part, the side walls of the stoking chamber are formed by ceramic linings (43). The bottom of the stoking chamber is funnel-shaped and lined with ceramic refractory bricks (22, 51). The nozzle (21) opens via a collector (44) into the combustion chamber (2), which is also lined with ceramic refractory blocks (28, 26). A grate (50) is located inside the nozzle. The BH25 LAMBDA and BH33 LAMBDA boilers have two nozzles.-The boiler's heat exchange surfaces consist of side flues (3) behind the combustion chamber liners and a rear heat exchanger (4), comprising 5 or 7 separate channels.
The boiler is equipped with 30 mm thick mineral fiber insulation. The outer surface consists of 1 mm thick steel sheet covers. The front wall of the boiler features a viewing window (20) with ceramic glass.
The control panel (18) is located on the upper door. The control unit (7) itself is located on the rear wall of the boiler in the electrical control panel.

An air distribution panel (31) is located in the front part of the boiler under the front cover. In its lower part, there are 3 combustion air intake openings (40, 41, 42) with dampers (19), interconnected by a flat steel shaft. The openings are equipped with a sliding damper for regulating the secondary air ratio (9).

A detection arm (13) for the constant-heat layer is located in the stoking chamber (1), with its axis of rotation in the front wall of the stoking chamber. A balancing arm (48), located within the air distribution panel (31), is firmly connected to the detection arm (13). A constant-heat detection sensor (37) and a pressure mechanism consisting of a shaft with a pressure arm (46), which is connected to the stoking door (11) by a link (47), are located below the balancing arm (48).

The rear flue gas heat exchanger (4) contains turbulators (32) consisting of bars with cleaning segments suspended from a movable slide. The slide is connected by a pair of arms that are mounted on a single shaft with a control lever (33).
The water inlet pipes (16) open into a drain channel equipped with a flow opening with a thermostat (34), which regulates the amount of water flowing into the distributor (39), from where the water enters the boiler's water chamber through a number of small openings. The thermostat (34) is set to 60°C and is located under a sealed cap on the front wall of the boiler.
The boiler is supplied with a bottom door mounted on the left side (hinges on the left side). The door can be retrofitted to the right side.
The exhaust fan (8) can be rotated so that the flue gas outlet (15) faces any direction.

The upper stoking door is equipped with a safety latch (27), and its tightness is ensured by a double sealing cord when closed.
The control panel (18) is located on the top door. The control unit (7) itself is located on the rear wall of the boiler. For easier access, the control unit (7) can be mounted on any side wall of the boiler or on the boiler room wall. The controller (7) and control panel (18) are interconnected via a data cable.

The controller included in the boiler's standard equipment allows for control of the boiler pump, charging of the storage tank and DHW tank, and equithermal control of 2 mixed heating circuits. By connecting an expansion module, an additional 2 heating circuits and a circulation pump can be controlled. The standard delivery of the controller includes a flue gas sensor, a boiler temperature sensor, and a storage tank temperature sensor.

4.2 Function Description

Fueling typically occurs when the boiler is in standby mode (the fan is not running). Opening the stoking door automatically tilts the detection arm (13) so that it does not obstruct the fuel being added. This tilting is secured by the locking of the push mechanism rod (47). It activates the sensor (14) and the exhaust fan (8) switches to full power.

The operator assesses the layer of embers remaining from the previous fuel charge. If this residual layer is still glowing, the operator simply adds fuel to the stoking chamber. If the residual layer has already cooled down, it serves as kindling, and before adding fuel, a lit piece of paper, for example, is placed on top of it.

After adding fuel and closing the door, the fan creates a vacuum, causing combustion air to flow into the boiler.

Pre-heated air enters the distribution panel (31) through the opening on the right (42), rises through a channel in the distribution panel, passes through an opening in the upper part of the boiler body, and is fed above the fuel layer through a longitudinal opening (49). This accelerates the drying and ignition of the new fuel layer.

Secondary air enters the distribution panel (31) through the central opening (41), from there it flows through a circular opening in the boiler body beneath the bottom of the stoking chamber, from which it is fed through a series of openings into channels in the bottom of the fittings (22, 36), where it is preheated and exits into the nozzle (21).

Primary air enters the distribution panel (31) through the opening on the left (40), from there, through an opening in the body, it flows beneath the bottom of the stoking chamber, then rises through the rear channels of the fittings (43) behind the protective shell of the stoking chamber (6), and from there exits through the front grooves of the fittings (43) into the lower layer of fuel. This process results in the primary combustion of the fuel (gasification). The resulting wood gas flows through a nozzle (21) into a mixer (44), where it mixes with secondary air. The gaseous components are then burned (secondary combustion) within the combustion chamber (2). The hot flue gases pass successively through the side (3) and rear (4) heat exchangers, where they transfer their heat to the water being heated. The cooled flue gases are drawn in by the exhaust fan (8) and expelled through the outlet (15) into the chimney.

Ash slides into the combustion chamber (2), from where it is removed by occasional cleaning.

The fan speed is controlled by a regulator based on the water and flue gas temperatures and the current power demand.

The lambda probe measures the residual oxygen content in the flue gases and, based on this value, uses a stepper motor to adjust the damper (9) to achieve the set optimal value.

Once the fuel has burned down to the base layer, the detection arm (13) stops pressing the fuel, and it tilts upward toward the stoking chamber; this is detected by sensor (37), which, via the controller, shuts off the exhaust fan (8). The boiler then switches to a steady-burn standby mode. Depending on the chimney draft, the type of fuel used, etc., the base layer maintains the heat for up to 8 hours.

The thermostat (34) limits the water flow into the internal distribution channels so that the temperature of the heat exchange surfaces remains above 60°C.

4.3 Boiler dimensions

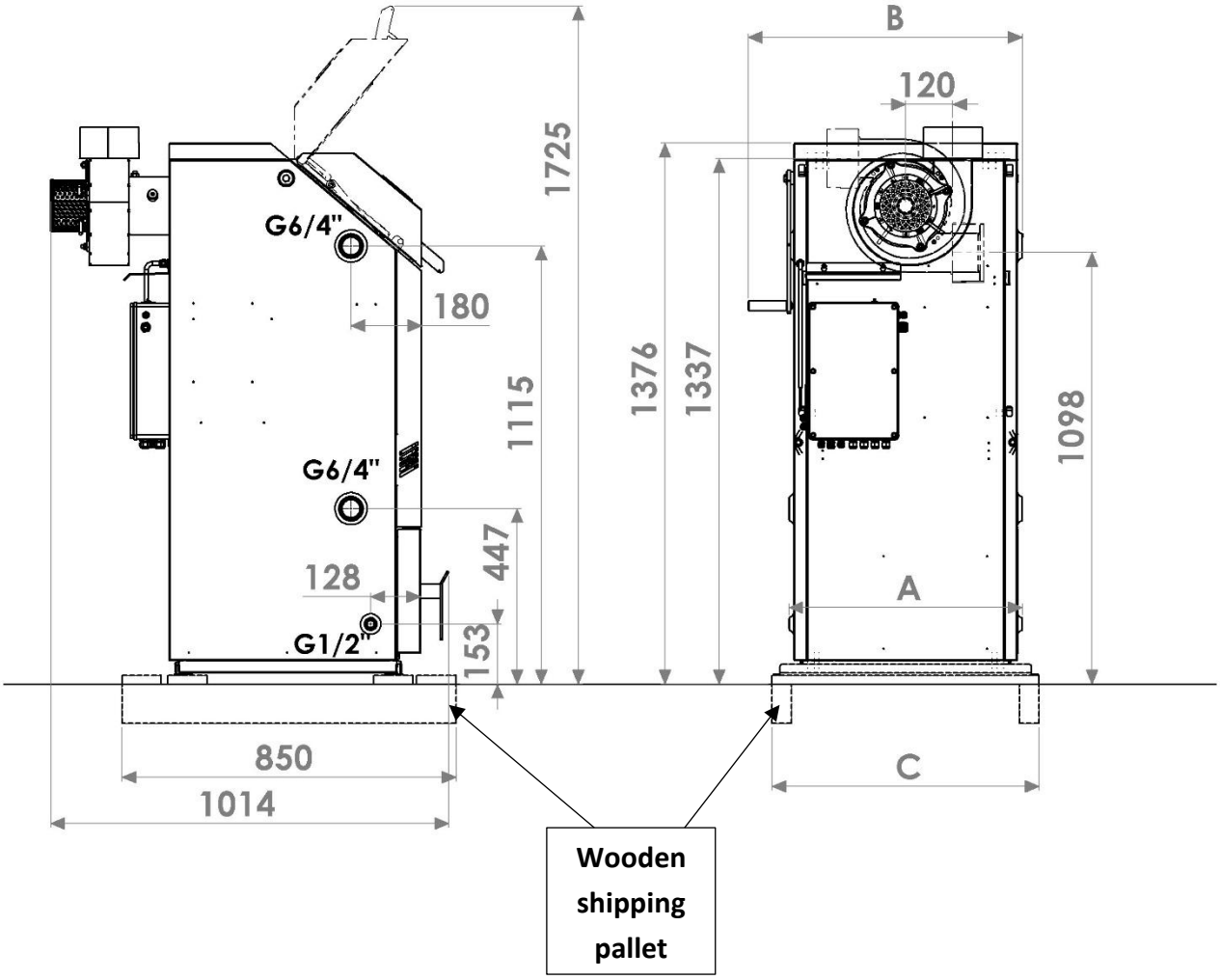

Table 5. Table of basic dimensions of the BLAZE HARMONY LAMBDA boiler

	BH12 LAMBDA	BH18 LAMBDA	BH25 LAMBDA	BH33 LAMBDA
A	595	595	780	780
B	698	698	882	882
C	680	680	870	870

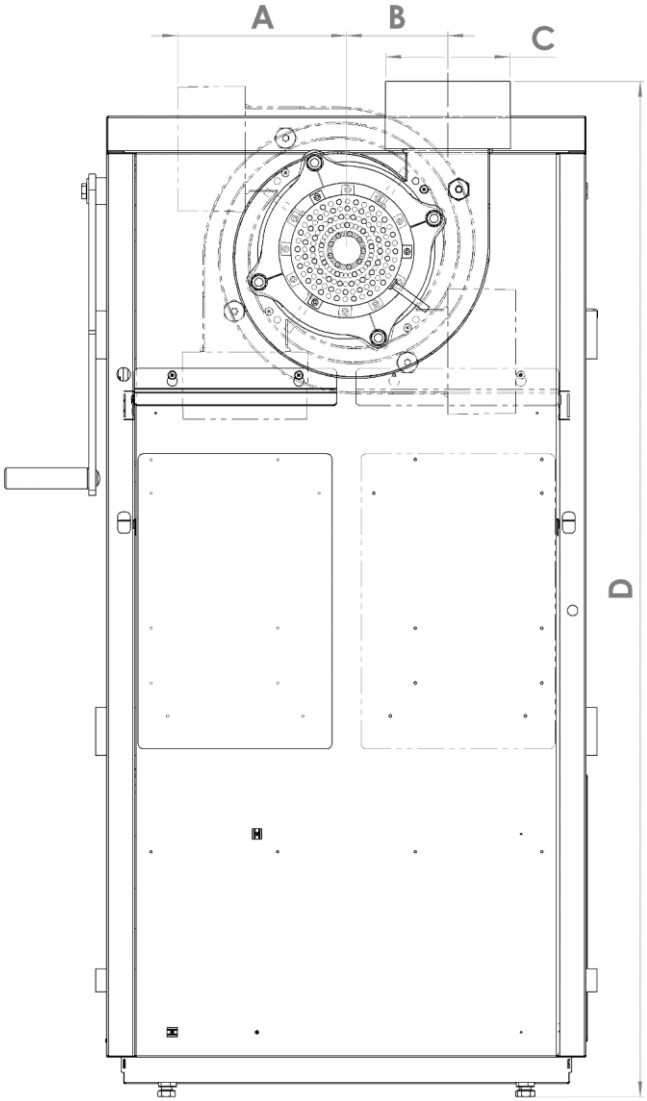

Rear view of the boiler with dimensions

Table 6. Table of basic dimensions of the BLAZE HARMONY LAMBDA boiler

	BH12 LAMBDA	BH18 LAMBDA	BH25 LAMBDA	BH33 LAMBDA
A	200	200	200	200
B	120	120	120	120
C	ø149	ø149	ø149	ø149
D	1200	1400	1400	1400

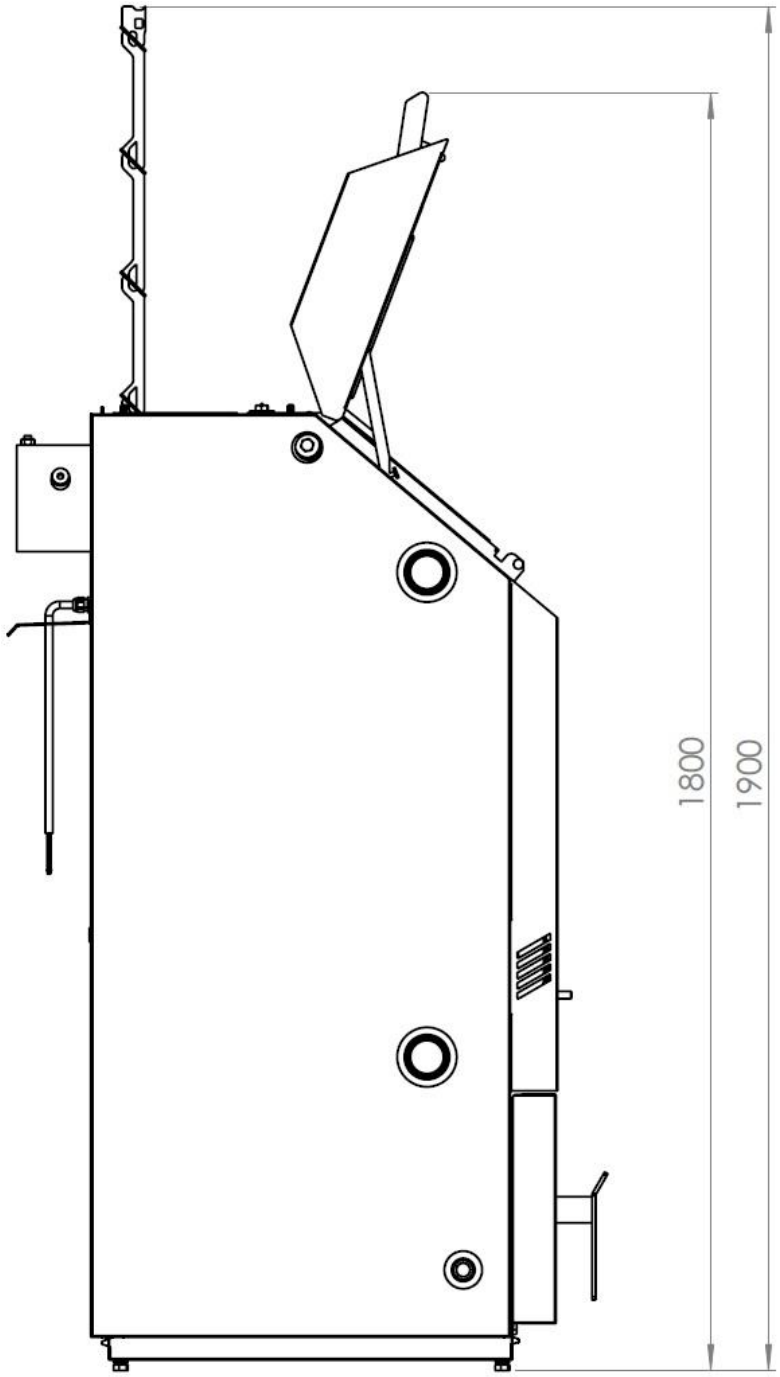

Side view of the boiler with the upper door open
+ minimum dimension for removing the turbulators from the BH18, 25, and 33 LAMBDA boilers
(For the BH12 LAMBDA boiler, this dimension does not exceed the height of the boiler with the upper door open.)

4.4 Boiler diagram

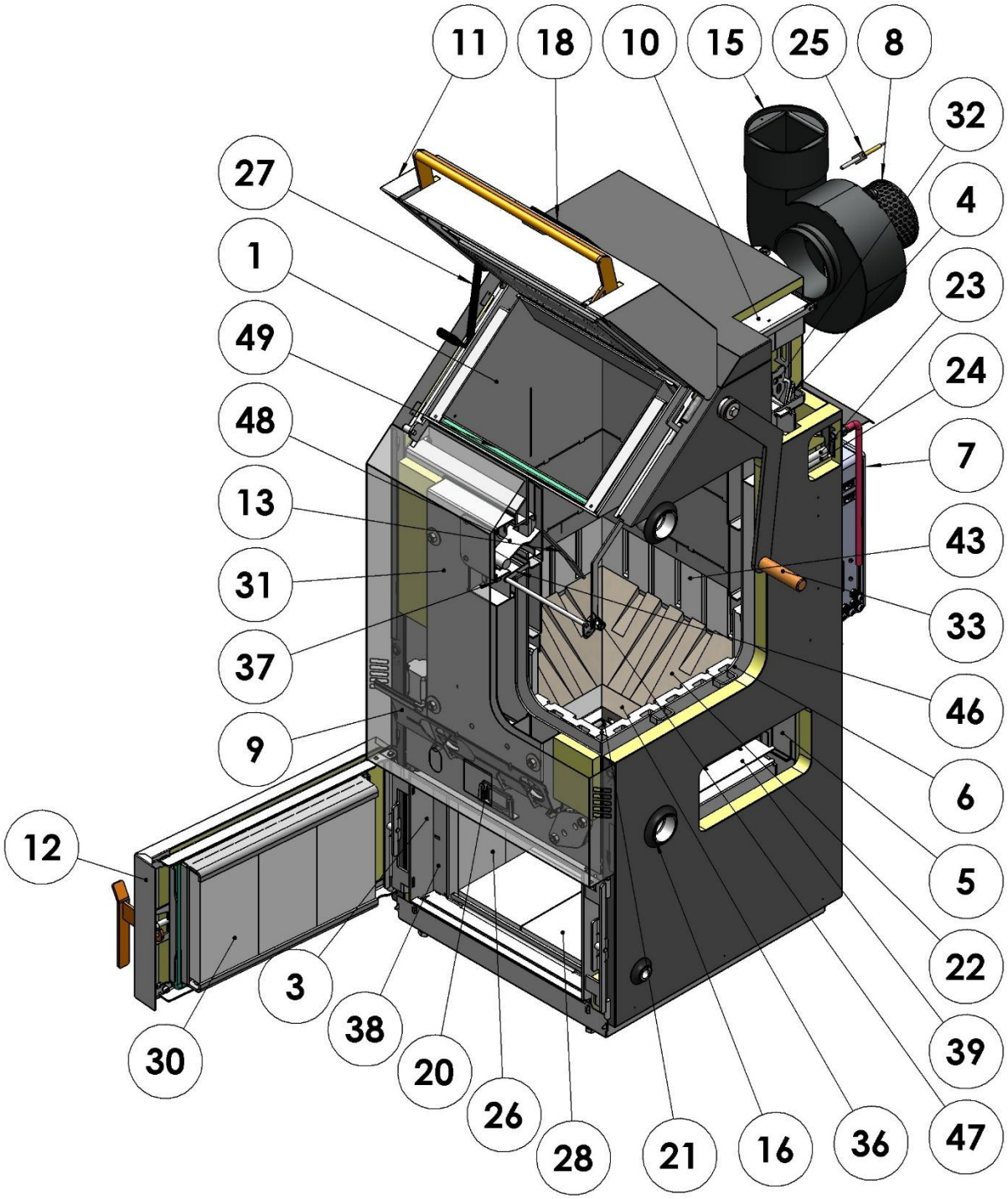

BH LAMBDA boiler diagram – front view

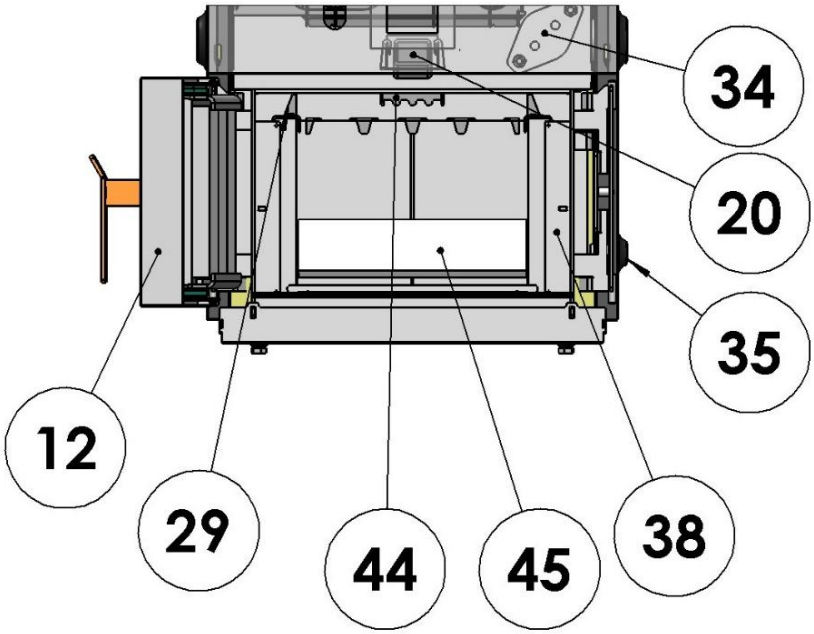

BH LAMBDA boiler diagram – combustion chamber

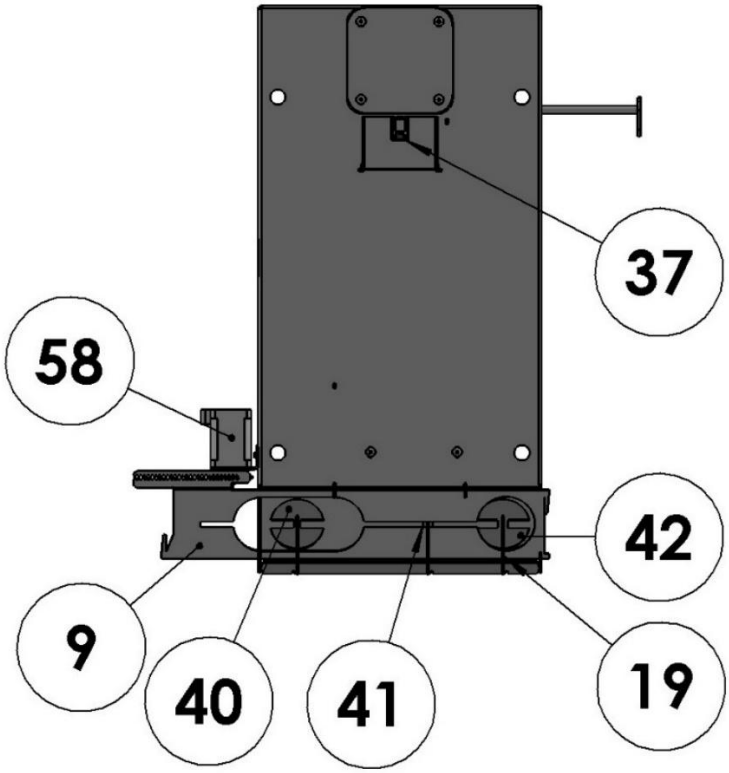

BH LAMBDA boiler diagram – aeration detail

Legend

1. Firing chamber
2. combustion chamber
3. side flue gas heat exchanger
4. rear flue gas heat exchanger
5. boiler body
6. protective casing for the stoking chamber
7. boiler control unit
8. flue gas exhaust fan
9. secondary air regulator (sliding damper)
10. rear heat exchanger cover
11. Feeding door
12. lower door
13. constant-heat detection arm
14. stoking door sensor
15. flue gas outlet
16. Inlet connection G 6/4" (internal)
17. G 6/4" outlet pipe (internal)
18. controller panel
19. air damper (3x)
20. viewing window with ceramic glass
21. nozzle
22. bottom fitting for the stoking chamber (4x[1], 2x[2])
23. emergency thermostat sensor
24. water temperature sensor
25. flue gas temperature sensor
26. side combustion chamber fitting (6x)
27. locking strut
28. combustion chamber bottom fitting (6x[1], 9x[2])
29. Combustion chamber component support rail (2x side, 1x rear)
30. lower door fitting (3x[1)] , 4x[2)])
31. air distribution panel
32. turbulators (5x[1)] , 7x[2)])
33. turbulator lever
34. Boiler water temperature control thermostat
35. 1/2" drain and fill nozzle
36. nozzle fitting (4x[1)], 8x[2])
37. convection layer detection sensor
38. side heat exchanger plug (2x)
39. water distributor
40. primary air inlet
41. secondary air inlet
42. pre-drying air inlet
43. cladding fitting (12x[1], 14x[2])
44. combiner
45. Rear heat exchanger outlet plug
46. pressure arm
47. pressure mechanism rod
48. balancing arm
49. pre-drying air outlet
51. long bottom fitting for the feeding chamber (2x)[2)]
52. front combiner fitting (2x) [2)]
53. side combiner fitting (2x) [2)]
54. locking wedge (2x) [2)]
55. center fitting (1x) [2)]
56. accessory fitting (2x) [2)]
57. center of the nozzle [2)]

[1)] only for BH12 LAMBDA and BH18 LAMBDA boilers

[2)] only for BH25 LAMBDA and BH33 LAMBDA boilers

5 Boiler Assembly and Installation

During the installation and operation of the boiler, all local regulations and requirements pertaining to national and European standards must be observed. Installation and setup may only be performed by a qualified and authorized person.

5.1 Quality and completeness check

a) Check for any hidden damage that may have occurred during transport, even if the boiler packaging was not damaged. If damage is found, immediately send the information along with photographic documentation to the email address: info@blazeharmony.com.

b) Check the contents of the boiler package. The BLAZE HARMONY LAMBDA boiler includes:
   - a complete boiler unit with a controller
   - exhaust fan
   - turbulator lever with connecting parts (screws, nuts)
   - a set of cleaning tools (2 pcs)
   - integrated mixing thermostat + thermostat spring (part of the boiler)
   - lambda probe
   - CT10 sensor (4 pcs)
   - CT2S flue gas sensor
   - 230V device connection connector (6 pcs)
   - boiler operating and installation manual
   - warranty card

5.2 Dismantling the boiler for relocation to the boiler room

The boiler is delivered on a wooden shipping pallet, which allows for handling with a pallet jack. The boiler is secured to the pallet via two steel crossbars using 4 M12 bolts. After placement in the boiler room, the pallet is removed and the bolts are reinstalled (they are used to level the boiler).
To reduce the boiler's weight, some of its parts can be removed according to the following procedure:

a) Removing the ceramic firebricks from the combustion chamber
   - Slide the side liners toward you
   - Tilt the rear liners toward you and remove the stainless steel strip. Then remove the rear liners.
   - Remove the bottom liners last

   (Arrangement of ceramic liners in the combustion chamber – see Section 4.4.)

b) Removing the ceramic inserts from the stoking chamber
   - Remove the bottom firebricks from the stoking chamber

   (Arrangement of ceramic refractory blocks in the stoking chamber – see Section 4.4.)

c) Removing the boiler covers
   - It is necessary to remove the regulator junction box and any cables entering under the boiler cover
   - We do not recommend removing the bottom cover. Without using a transport pallet, it may be damaged and it will not be possible to reinstall the covers.

   (The controller junction box is located on the rear wall of the boiler.)

d) Removing the bottom door

- Before removing the bottom door, first remove the front cover.
- Open the door and slide it upward to release it from the hinge.

<u>When assembling the boiler, follow the reverse procedure of disassembly.</u>

5.3 Disassembling the shipping pallet

Step 1: 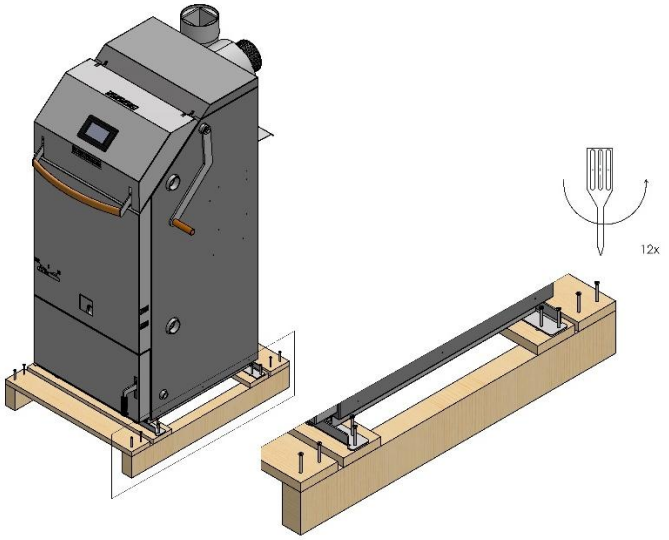	**Step 2:** 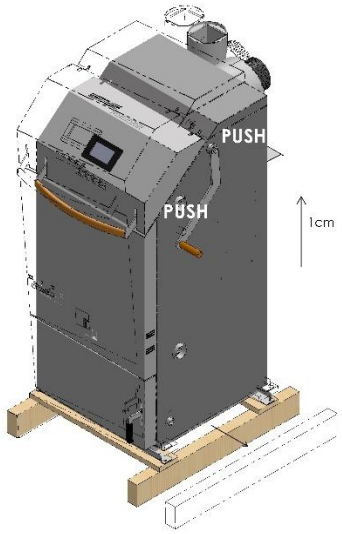
Step 3: 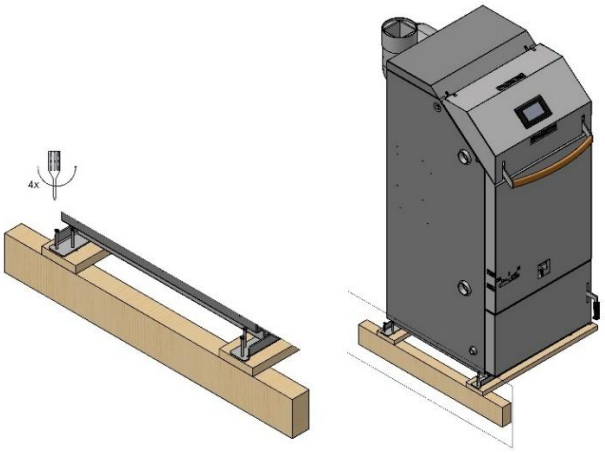	**Step 4:** 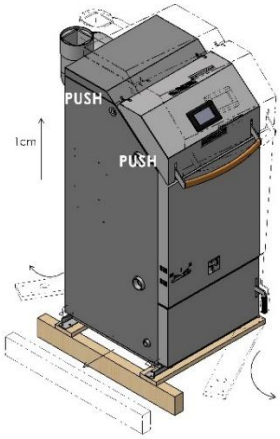
Step 5:	

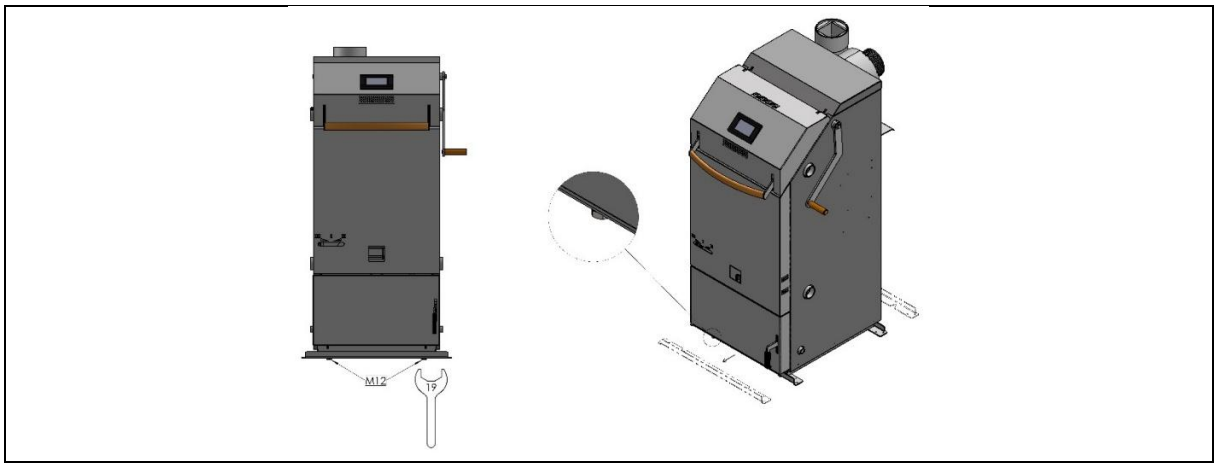

Procedure for disassembling the shipping pallet:

- Remove the crosswise protective boards (front and rear walls of the boiler).
- Unscrew the screws holding the crosswise steel rails (boiler side walls).
- Tilt the boiler to one side and slide out the longitudinal beam on the opposite side. Repeat on the other side.
- Tilt the boiler slightly backward and slide out the front cross support board. Do the same on the opposite side.
- Loosen the 4 M12 bolts (19 mm socket wrench) between the floor and the cross rails. It is not necessary to lift the boiler while loosening them. Simply loosen the bolts by one full turn.
- Tilt the boiler slightly backward and slide the front rail sideways by approx. 20 mm. This will release it from the screw head and allow it to drop down. Repeat on the opposite side.
- Use 4 M12 screws to secure the boiler in a stable horizontal position.

5.4 Handling the boiler

When handling the boiler during transport to the boiler room, we recommend using the 6/4" outlet sockets on the side walls of the body, into which standard steel pipes with a G 6/4" external thread are screwed (to a depth of at least 40 mm) – see the figure below.
Another suitable feature for handling the boiler is the flue gas outlet – see the figure below.

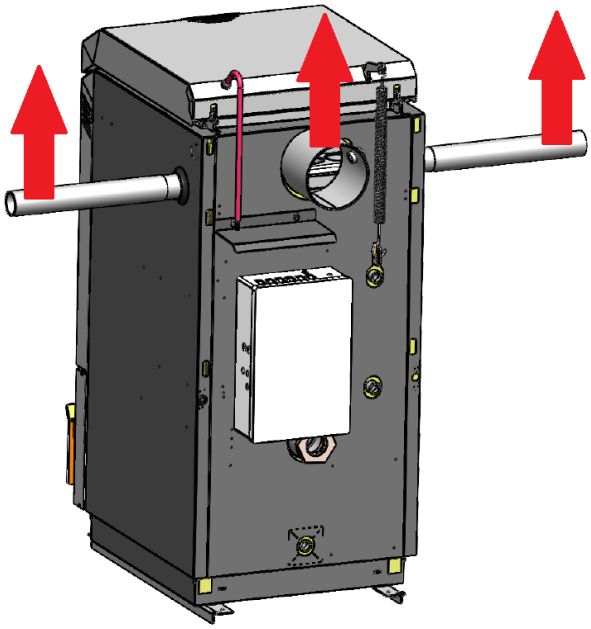

Boiler Handling Method

(illustrative image)

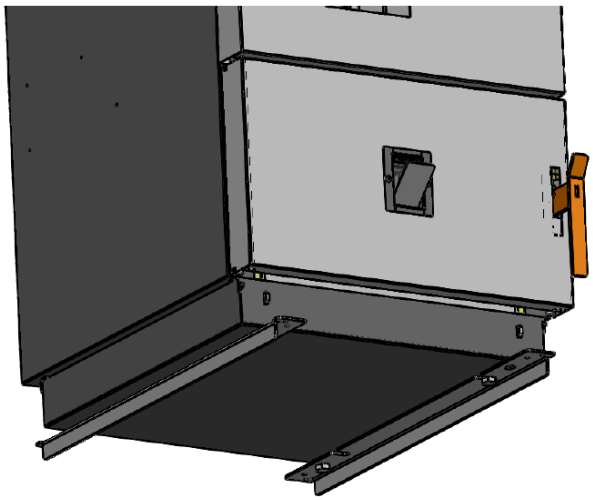

Use of transport legs to move the boiler across the floor

(illustrative image)

Transport rails, which were used to secure the boiler to the pallet, can also be used to move the boiler across the floor. By mounting them on the boiler in an inverted position—see the image above on the right—skids are created that facilitate moving the boiler across a horizontal floor.

This method of handling the boiler is only possible in situations where there is no risk of (or no issue with) floor damage.

Any other method of handling the boiler (by the door, casing, controller, etc.) poses a risk of damaging the boiler.

5.5 Boiler placement in the boiler room

The boiler must be installed in accordance with the requirements of the standards.
There must be a minimum clearance around the boiler (see figure below) to allow for operation, maintenance, or servicing.
To facilitate access to the control unit, it can be relocated from the rear wall of the boiler to the side wall or to the boiler room wall.
The boiler must be placed on a non-combustible, thermally insulating base that extends beyond the boiler's footprint by at least 300 mm at the front and at least 100 mm on the other sides.
The minimum permissible distance between the outer contours of the boiler and combustible materials (see EN 13501-1) must be at least 400 mm. No objects made of combustible materials may be placed on the appliance or within a distance less than the safe distance from it.

If there is no suitable space in the heated building, heating can be provided from a nearby structure (garage, barn, workshop), where the boiler and usually the tank are located. Pre-insulated underground piping can be used to connect the structures.

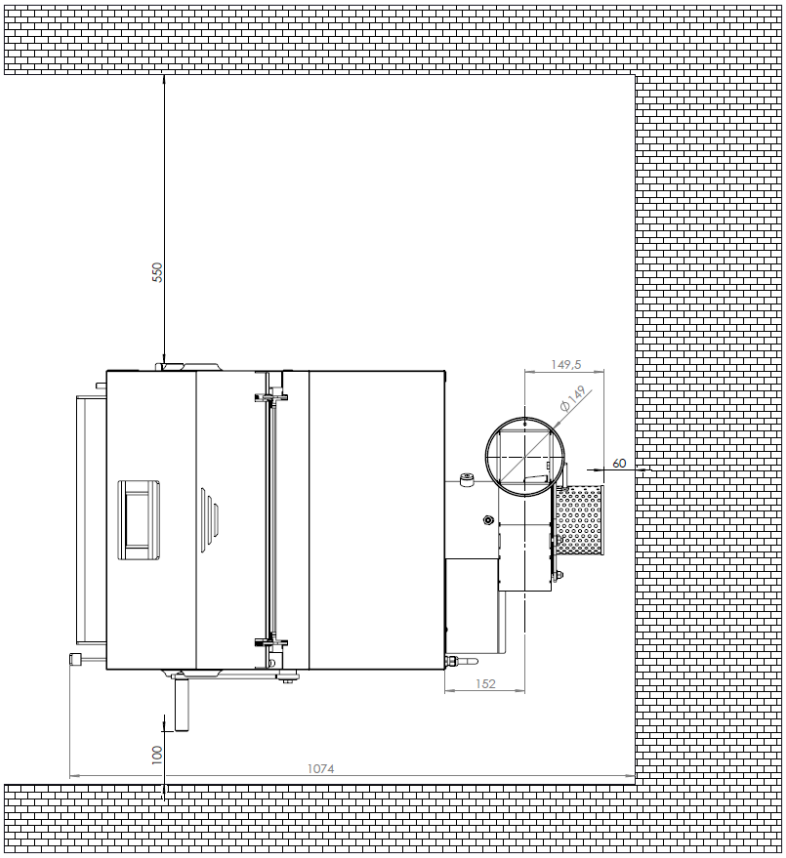

Minimum dimensions for boiler placement (illustrative image)

5.6 Installation of the exhaust fan

The exhaust fan is supplied disassembled and is stored in the boiler's stoking chamber for transport.

- Loosen the hex socket screw on the boiler flue.
- Slide the fan into place and select the desired position for the installation—see the illustration on page 12. Then secure it with the hex socket screw.
- Connect the exhaust fan cable (5-pin connector) to the boiler control unit.
- Place the flue gas sensor into the opening in the exhaust fan and secure it with a screw. Connect it electrically to the boiler control unit.

5.7 Installation and Operation of the Lambda Probe

The boiler is supplied with a lambda probe, which ensures continuous regulation of the combustion air supply. The lambda probe continuously regulates the combustion air supply according to the measured residual oxygen content in the flue gases, supporting controlled combustion under varying operating conditions. Thanks to the lambda probe, the controller knows the residual oxygen value in the flue gases. Based on this information, the servomotor then adjusts the ratio of secondary to primary combustion air by moving the air intake damper.

Installation of the lambda probe:
The lambda probe is screwed into the flue gas outlet pipe (between the boiler and the fan) – see figure. The connector of the lambda probe's connection cable is plugged into the control unit on the rear wall of the boiler.

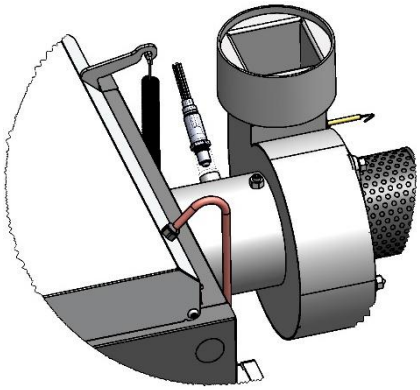

Installation of the lambda probe on the boiler (illustrative image)

Before installing the lambda probe, make sure the boiler is disconnected from the mains power supply!

Operation of the lambda probe:
During boiler operation, the combustion air damper is controlled automatically based on the measured residual oxygen value in the flue gas. The control unit moves the damper via a stepper motor: If the oxygen value is higher than the set value, the controller moves the damper to the left. This increases the proportion of primary and pre-heating air. The oxygen value in the flue gas decreases.
If the oxygen value is lower than the setpoint, the controller moves the damper to the right. This increases the proportion of secondary air. The oxygen value in the flue gas increases.
During ignition and fuel burn-out, oxygen values are higher; the damper is usually in the left position.

Every time the stoking chamber is opened during boiler operation, it affects the measured oxygen level in the flue gases.

5.8 Connection to the Chimney

The boiler must be connected to the chimney in accordance with the requirements of the standards.

To properly commission the boiler for continuous operation, a chimney inspection is required; this inspection is valid only if it consists of the following components: an inspection report, a technical protocol, and a flue gas path calculation. Whether the existing chimney is suitable for the type of boiler being used must be verified by a chimney sweep's calculation prior to boiler installation.

Since the boiler is equipped with an exhaust fan, the requirements for chimney draft are minimal. The flue cross-section must be large enough for the chimney to be able to carry away a greater volume of flue gases during stoking and firing. With the door open, the boiler produces roughly twice the volume of flue gases compared to operation at rated output.

Table 7. Chimney flue diameters for BLAZE HARMONY LAMBDA boilers

Boiler		**BH12 LAMBDA, BH18 LAMBDA**	**BH25 LAMBDA, BH33 LAMBDA**
Recommended chimney flue diameter	[mm]	160	180
Minimum chimney flue diameter	[mm]	150	150

We do not recommend using a chimney draft regulator for standard chimneys (with an operating draft of 10 to 30 Pa). They are a source of leaks and draw heat from the heated building into the chimney.

The flue must be securely assembled and fastened to prevent accidental or spontaneous loosening of its components. Flue sections longer than 2 m must be firmly anchored. All flue components must be made of non-combustible materials. We recommend sealing leaks in the flue (joints) with sealant designed for this purpose or by taping them with aluminum tape.

We recommend insulating flue pipes longer than 1 m with suitable insulation, e.g., mineral fiber with an outer aluminum foil. In an uninsulated flue pipe, the flue gases cool down significantly. During low-power operation, there is a risk of moisture condensation in the flue gases.

The chimney door must be airtight. A seal can be achieved with an additional cover featuring a rubber gasket secured, for example, with screws.

We recommend that the chimney flue be sufficiently thermally insulated. A chimney located inside the building is ideal; outdoor chimneys experience greater cooling. The minimum permissible flue gas temperature 1 m below the upper edge (mouth) of the chimney is 90°C.

5.9 Ensuring Air Supply to the Boiler

The air required for combustion can be supplied to the boiler room directly from the outside or from the living space. Air supply from the living space is, in a sense, more advantageous because it provides ventilation while also utilizing the heat of the air that would otherwise be lost with conventional ventilation (heat savings are approximately 2%). At an output of 10 kW, air consumption is approximately 20 m^3/h, which corresponds to the minimum air exchange rate required for a typical-sized apartment.

During stoking, when the door is open and the boiler fan is running at full capacity, air consumption is 100–200 m^3/h.

If natural infiltration (micro-ventilation through windows and doors) does not provide a sufficient air supply, it must be ensured via a ventilation opening to the outside with an area of at least 150 cm^2.

Regulating grilles on the ventilation openings must be positioned so that they do not become clogged.

We recommend installing a carbon monoxide detector near the boiler.

5.10 Heating system design, connection of the boiler

5.10.1 Integrated mixing system

The boiler is equipped with an integrated mixing system, where the internal thermostat (original Blaze Harmony thermostat with order code 800/400283) , together with the system of internal mixing channels, ensures that the temperature of all heat exchange surfaces is higher than 60°C. This protects the boiler against low-temperature corrosion even when connected without a controlled mixing branch (with a temperature-controlled mixing valve). This mixing works very well even in a gravity-fed system. At return water temperatures below 50°C, the integrated mixing thermostat closes. The resulting reduction in flow is accompanied by an increase in the outlet water temperature. At very low return water temperatures (less than 20°C), the outlet water temperature may therefore exceed 90°C, and the transferred output is limited to a certain extent. At very low return water temperatures, the boiler must be started up gradually to prevent the boiler from overheating.

If the boiler is connected to a circuit with return water control (three-way or four-way valve with temperature-controlled mixing), the integrated mixing thermostat is not activated.

5.10.2 Input and Output Connections

The boiler inlet is connected to either of the two lower G 6/4" ports. The boiler outlet is connected to any of the two upper G 6/4" connections. The remaining connections are capped or used for a parallel branch. A drain and fill valve can also be installed in the unused inlet connection.

5.10.3 Storage Tank Size

The volume of the storage tank should allow a depleted tank (i.e., cooled to 30–40°C) to absorb the energy of an entire fuel charge (heating by 50°C) – see Table 8. If the tank volume is smaller, boiler operation becomes more demanding (during boiler operation, the corresponding amount of heat must be removed by the heating system, or it is not possible to load full fuel batches).

Table 8: Required storage tank volume

Boiler		**BH12 LAMBDA**	**BH18 LAMBDA**	**BH25 LAMBDA**	**BH33 LAMBDA**
Recommended minimum storage tank volume for softwood	[l]	700	1000	1500	1500
Recommended minimum storage tank volume for hardwood	[l]	1000	1500	2000	2000
Recommended maximum storage tank capacity	[l]	1500	2000	3000	3000

For a gravity-fed “boiler–storage tank” system, the minimum storage volume must be increased by 10–20%.

We do not recommend using storage tanks with a capacity greater than the specified maximum due to disproportionate financial costs and significant heat loss.

The minimum volume of the storage tank is determined by the EN 303-5 standard according to the following formula:

$$V_{sp} = 15T_B \times P_N \left(1 - 0{,}3\frac{P_H}{P_{min}}\right)$$

where:

V_{sp} storage tank volume [l]

T_B burning time of a single fuel charge at the boiler's rated thermal output [h]

P_N rated thermal output of the boiler [kW]

P_H thermal load (loss) of the building [kW]

P_{min} minimum guaranteed boiler heat output [kW]

The minimum volume of the storage tank must not be less than 300 liters.

5.10.4 "Boiler–storage tank" connection with gravity circulation (without a pump)

Where the storage tank is located near the boiler, we recommend implementing the "boiler-tank" circuit as a gravity-fed system (without a pump, using larger-diameter pipes) – see connection diagram No. 1 (Section 5.11.1). The advantages of a gravity-fed system are reliability and operational savings (on electricity and pump maintenance); cost-wise, it is comparable to a forced-circulation system (the higher cost of piping is offset by savings on the pump and accessories).

The gravity-fed "boiler–storage tank" circuit must be designed to transfer the boiler's rated output at a temperature drop of 90/60°C. This is achieved, for example, if the following conditions are met:

- The total pipe length is up to 4 m.
- Pipe diameter – see Table 9
- The number of elbows does not exceed 3, or the number of bends does not exceed 6.
- The boiler and tank are on at least one level (floor). The tank inlet is at least 50 cm (boiler up to 25 kW) or 80 cm (boiler 30 kW) above the boiler outlet. If ceiling height allows, it is advantageous to place the tank higher (by 10 to 50 cm).
- If there is a check valve in the circuit, its pressure drop must be less than 0.3 mbar at rated output and a temperature difference of 60/90°C (Kv < 3 m³/h). This requirement is met, for example, by the gravity-operated valve specially developed for this type of boiler and supplied by BLAZE HARMONY – see Section 5.10.13. A standard horizontal (floating) valve is unsuitable due to high pressure loss.

Table 9: Conditions for gravity-fed connection of a boiler with a storage tank

Model	A – minimum height of the inlet to the storage tank from the floor	Diameter of the copper pipe between the boiler and the storage tank	Diameter of the steel pipe between the boiler and the storage tank
BH12 LAMBDA	150 cm	42 mm	6/4"
BH18 LAMBDA	160 cm	42 mm	6/4"
BH25 LAMBDA	180 cm	42 mm	6/4"
BH33 LAMBDA	190 cm	42 mm	6/4"

5.10.5 “Boiler – storage tank” connection with forced circulation (with pump)

Where the location of the storage tank allows for at least partial gravity circulation (the tank and boiler are located at the same elevation), we recommend placing the boiler circuit pump in the bypass branch—see connection diagram No. 2 (Section 5.11.2).

The advantage of this configuration is improved integrated mixing and better natural circulation (the pump does not restrict flow). The recommended pipe diameter is 26–33 mm (Cu 28–35). In this configuration, circulation is gravity-fed for most of the operation. The pump only activates when the boiler temperature exceeds, for example, 85 °C. We recommend installing a pump with lower power (approx. 25 to 40 W).

The check valve in this configuration must allow for gravity-fed circulation—see Section 5.10.4.

Where the location of the storage tank does not allow even partial self-circulation (the tank is located far away or at a lower elevation than the boiler), the boiler circuit pump is installed "directly" in the return pipe from the tank to the boiler—see wiring diagrams No. 3 (Section 5.11.3) and No. 4 (Section 5.11.4). The check valve in this configuration does not need to allow for gravity-fed circulation.

5.10.6 Residual boiler output

The system must be designed to ensure the dissipation of residual boiler power, e.g., due to a power outage.

In the event of a power outage, the exhaust fan shuts off and the combustion air intake damper closes. This reduces the boiler’s output. However, the hot fuel bed and the boiler lining continue to release heat for approximately 1 hour. To prevent the boiler from overheating, this residual heat must be reliably dissipated—see Sections 5.10.7 and 5.10.8.

The amount of residual heat is 5–10 MJ, depending on the boiler’s instantaneous output and the type of fuel burned.

5.10.7 The most suitable method for dissipating residual heat

The most suitable way to ensure the dissipation of residual heat is to connect the boiler to **a storage tank** via a circuit that allows for the dissipation of residual heat through gravity-fed circulation (see recommended wiring). A standard circulation pump has a bore size of approximately 3/4", which allows for sufficient self-priming circulation to dissipate residual heat. Any filters and check valves must not have excessive pressure loss ($\sum Kv \geq 10\ m^3/h$).

For a 1000-liter storage tank, the boiler’s residual heat will cause the tank temperature to rise by approximately 2–4°C.

5.10.8 Other methods of dissipating residual heat

If gravity circulation to the storage tank cannot be used to dissipate residual heat (e.g., because the tank is too far from the boiler or is located lower than the boiler), another method must be selected, e.g.:

1. Install **an automatic cooling system** (see Section 5.12).
2. Connect the boiler via a gravity-fed branch to a combined DHW storage tank, which will absorb excess heat output in the event of a power failure. The DHW tank volume should be at least 120 L, with the boiler’s residual output causing it to heat up by 10 to 20 °C. Due to the risk of scalding, it is recommended to equip the outlet from the DHW tank’s with a thermostatic mixing valve or to use thermostatic faucets.
3. Use **a backup power source** for the circulation pump. A power source with a sinusoidal supply voltage must be used.
4. Use **a** properly connected **open expansion tank**. In the event of a power failure, excess heat will be dissipated through evaporation.

5.10.9 Water

We recommend using soft water that is free of mechanical impurities and chemically inactive to fill the boiler. If necessary, the designer will recommend suitable additives for the water in the heating system.

5.10.10 Open expansion tank

If the system includes an open expansion tank, it must be located so that it does not freeze. Oxidation can be limited by a thin layer of oil on the surface. The volume of the expansion tank must be at least 5% of the total water volume in the heating system.

5.10.11 Connecting the Boiler to the Existing System

If the boiler is installed in place of another type of boiler and the existing mixing valve for return protection remains in the circuit, the overall functionality of the connection must be assessed in terms of residual heat dissipation, and automatic cooling must be installed if necessary—see Section 5.12. The integrated mixing thermostat (original Blaze Harmony thermostat) is not installed in this case.

5.10.12 Boiler connection with a storage tank

If possible, it is preferable to have 1 large tank rather than 2 small ones. This is cheaper in terms of investment, saves on floor space, and reduces heat loss due to surface cooling; the connection is also simpler. More detailed information on connecting 2 or more tanks is available on the Blaze Harmony website.
If necessary, the tank can be placed in another part of the building or on a different floor.
If there is no suitable space in the heated building, heating can be provided from a nearby building (garage, workshop), where the boiler and usually the tank are placed. Pre-insulated underground piping can be used to connect the buildings:

An automatic air vent valve located directly on the top outlet of the tank can be a source of problems. Any water leakage is difficult to detect, and moisture in the insulation can cause corrosion of the tank body.
We recommend connecting the outlet to the heating system to the tank's top nozzle; otherwise, at least 10% of the tank's capacity will remain unused. This is not necessary for tanks equipped with an internal pipe as shown in the figure:

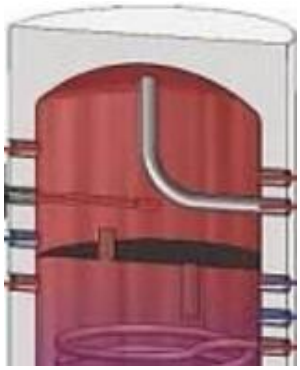

5.10.13 Gravity-fed valves BLAZE HARMONY

Application:

The BLAZE HARMONY gravity-operated check valve prevents backflow in the "boiler–storage tank" circuit.

In the "boiler–storage tank" circuit, a valve can be installed to prevent backflow from the "storage tank–boiler" circuit when the tank is heated and the boiler has been idle for an extended period. The heat output that escapes into the boiler room in this way is relatively small, because the air supply to the boiler is closed by a damper during shutdown (100–300 W depending on the temperature in the tank). In boiler rooms located within the building, this heat is used for heating, and a check valve is therefore not necessary.

Description:

The damper's outer housing consists of a welded steel body with access covers on both sides. The damper itself is mounted in a "self-aligning" edge-mounted bearing. The closing force of the damper is generated by the weight of an offset counterweight (gravity principle). Both the damper housing and the seating ring (seat) are made of stainless steel. The damper operates only in a position where the outlet opens vertically upward.

Parameters:

Weight: 3 kg

Dimensions:	155 x 145 x 80 mm
Inlet:	6/4" (male thread)
Output:	G 6/4" (internal thread)

Pressure loss diagram:

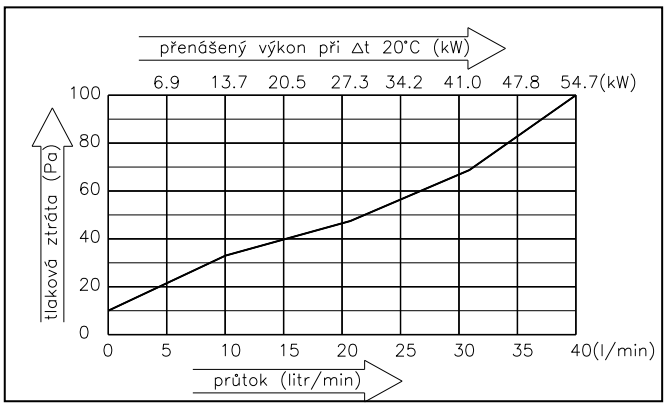

Diagram:

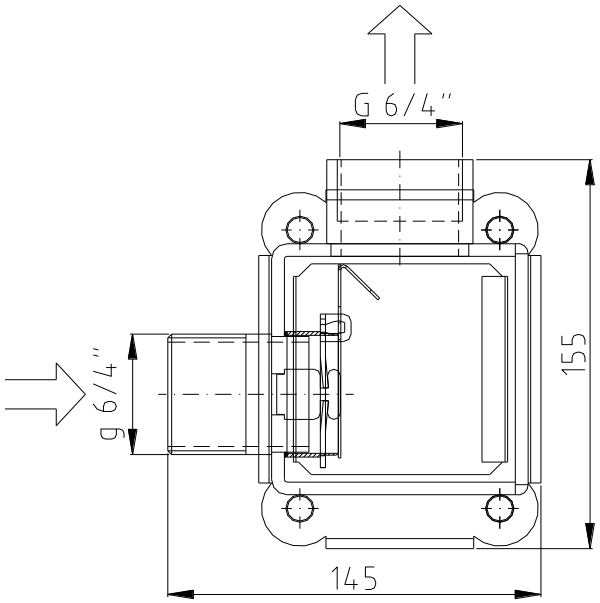

Installation:

1. The damper must be installed on the duct so that its outlet points straight up.
2. The damper can be connected directly to the boiler's outlet pipe.
3. The damper can be installed on both the return and outlet piping—see connection examples:

Connection to the boiler outlet pipe

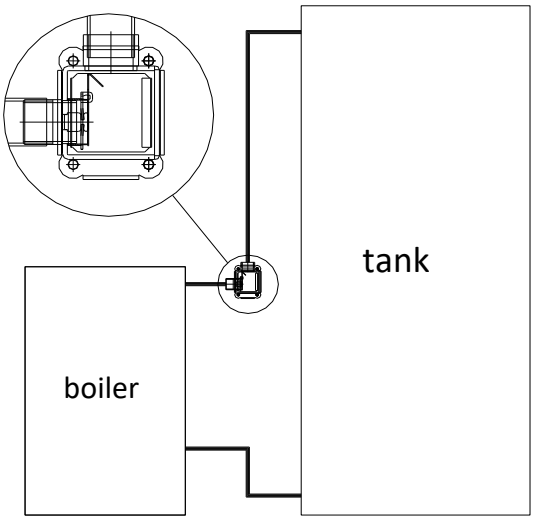

Connection to the boiler inlet pipe

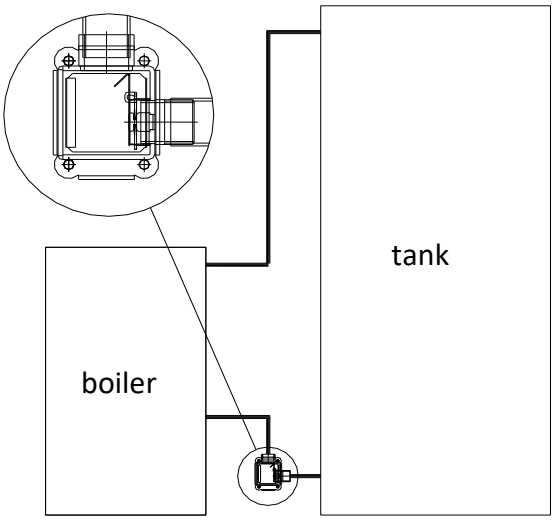

Maintenance, Function Check:

The damper requires no maintenance. Proper function is indicated by the boiler cooling down after shutdown, even though the storage tank remains heated. If the boiler is being heated by heat from the tank, we recommend draining the water, removing the damper cover, and checking whether debris or a foreign object is preventing the damper from seating properly on the ring (seat). If necessary, contact a service technician.

5.11 Hydraulic connection diagrams

All hydraulic connection diagrams shown here are for informational purposes only and do not replace a heating system design! Such designs are prepared by a qualified heating system designer.

5.11.1 Connection diagram No. 1 – gravity-fed connection with storage tank

The automatic cooling system for removing excess heat is not connected.

The conditions for gravity-fed connection must be observed – see Section 5.10.4.

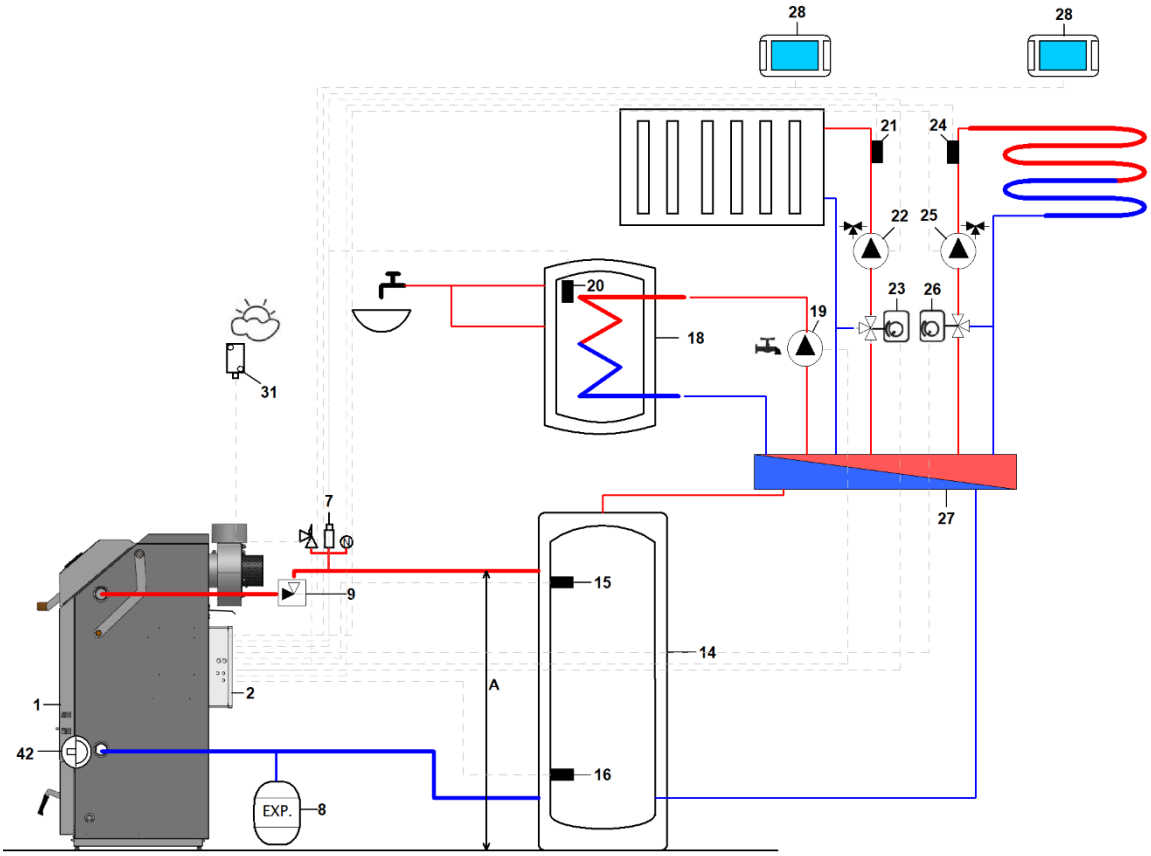

1 – BLAZE HARMONY LAMBDA boiler
2 – controller
7 – safety group (air vent, pressure gauge, safety valve)
8 – expansion tank
9 – special gravity-fed check valve
14 – storage tank
15 – Upper sensor of the storage tank (CT10)
16 – Lower sensor of the storage tank (CT10)
18 – DHW tank
19 – DHW pump
20 – DHW temperature sensor (CT10)
21 – MIX 1 temperature sensor (CT10)
22 – MIX 1 pump
23 – MIX 1 mixing valve actuator
24 – MIX 2 temperature sensor (CT10)
25 – Mix 2 pump
26 – MIX 2 mixing valve actuator
27 – manifold
28 – eSTER room panel
31 – Outdoor temperature sensor (CT10-P)
42 – integrated mixing thermostat

5.11.2 Wiring Diagram No. 2 – Combined System with Storage Tank and Injector

This is used where conditions do not allow for sufficient gravity-fed circulation between the boiler and the storage tank. Gravity-fed circulation is only capable of filling the tank to, for example, 50–70% of its capacity. The automatic cooling system for removing excess heat is not connected.

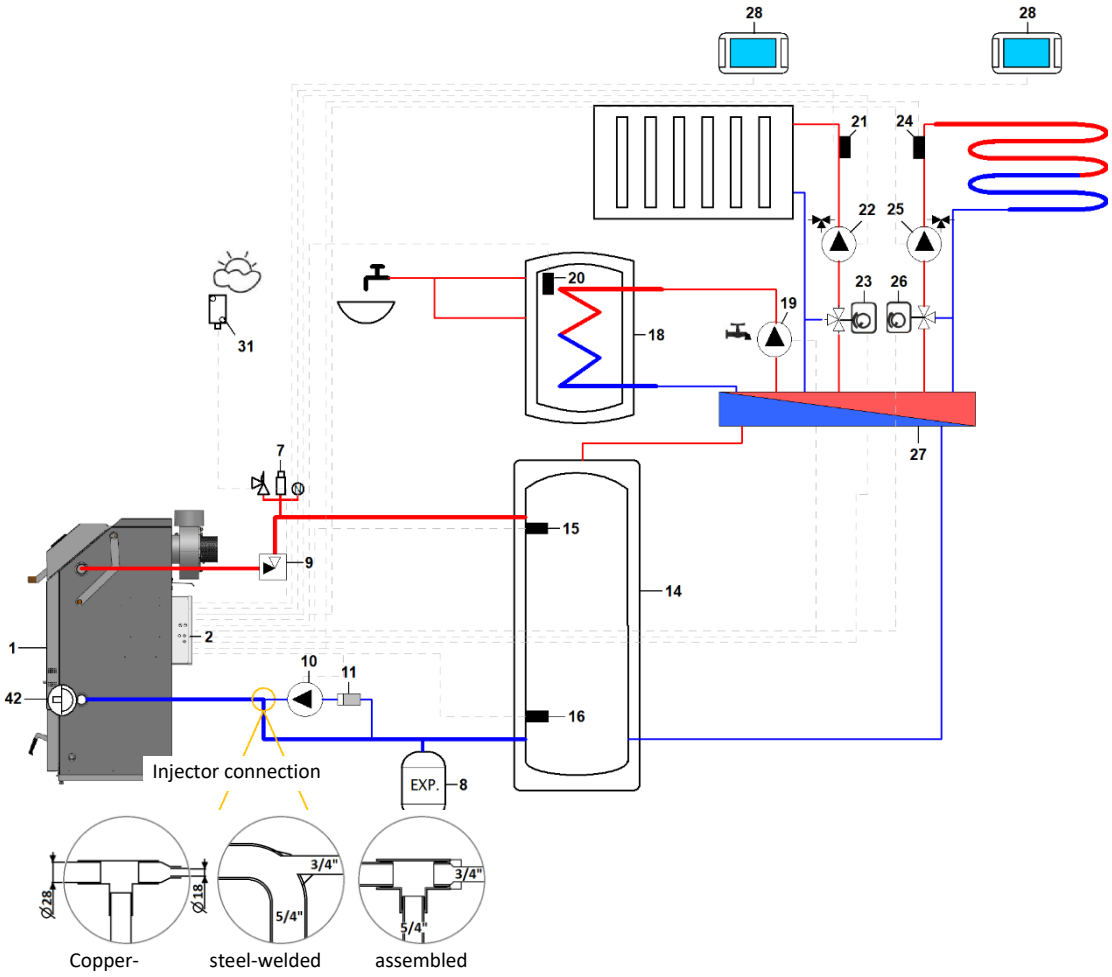

1 – BLAZE HARMONY LAMBDA boiler
2 – controller
7 – safety group (air vent, pressure gauge, safety valve)
8 – expansion tank
9 – special self-closing check valve
10 – boiler pump
11 – filter
14 – storage tank
15 – Upper storage tank sensor (CT10)
16 – Lower sensor of the storage tank (CT10)
18 – DHW tank
19 – DHW pump
20 – DHW temperature sensor (CT10)
21 – MIX 1 temperature sensor (CT10)
22 – MIX 1 pump
23 – MIX 1 mixing valve actuator
24 – MIX 2 temperature sensor (CT10)
25 – Mix 2 pump
26 – MIX 2 mixing valve actuator
27 – manifold
28 – eSTER room panel
31 – Outdoor temperature sensor (CT10-P)
42 – integrated mixing thermostat

5.11.3 Wiring diagram No. 3 – forced connection with storage tank

It is used in situations where conditions do not allow even partial gravity-fed circulation between the boiler and the storage tank.

The thermostatic DBV cooling valve (51) for removing excess heat is connected.

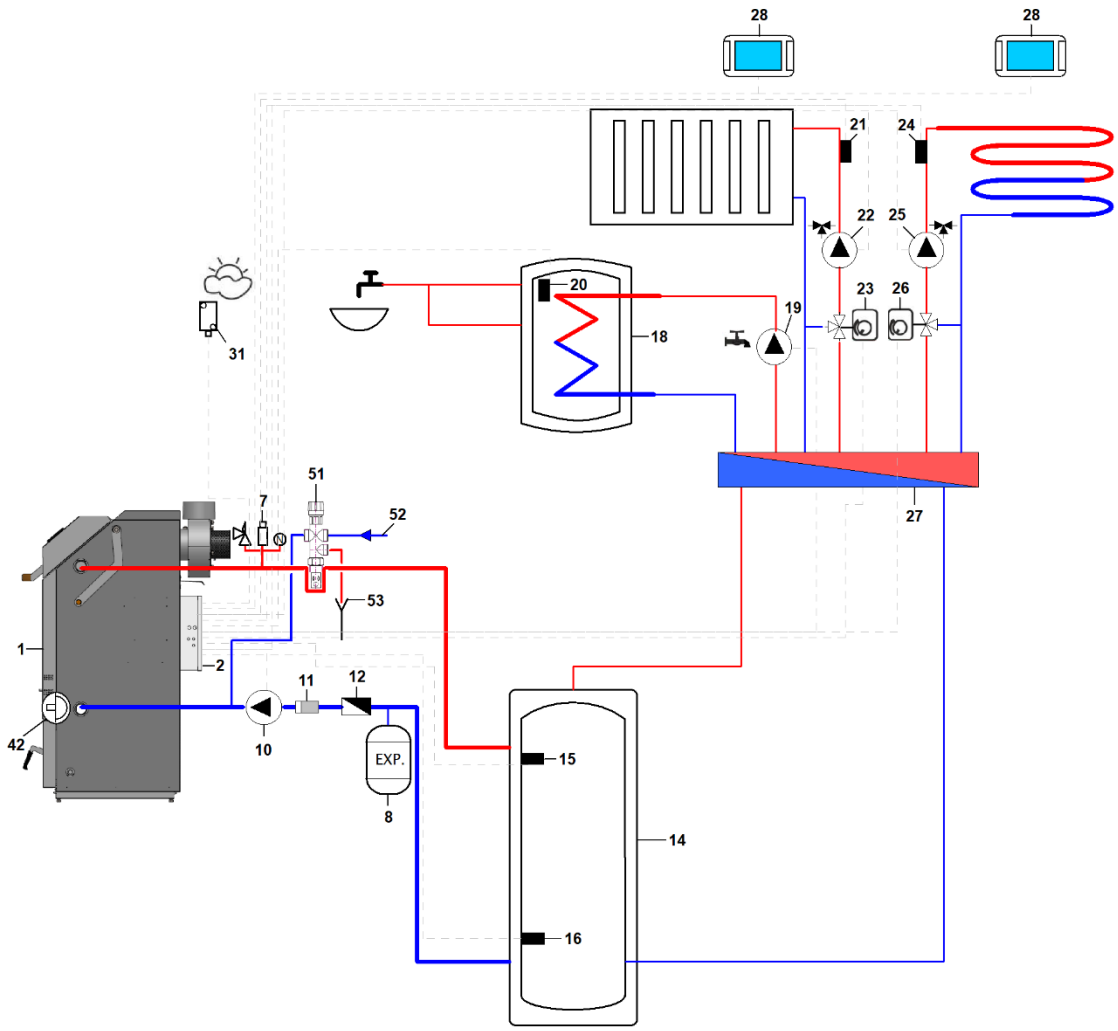

1 – BLAZE HARMONY LAMBDA boiler
2 – controller
7 – safety group (air vent, pressure gauge, safety valve)
8 – expansion tank
10 – boiler pump
11 – filter
12 – horizontal floating check valve
14 – storage tank
15 – Upper storage tank sensor (CT10)
16 – lower storage tank sensor (CT10)
18 – DHW tank
19 – DHW pump
20 – DHW temperature sensor (CT10)
21 – MIX 1 temperature sensor (CT10)
22 – MIX 1 pump
23 – MIX 1 mixing valve actuator
24 – MIX 2 temperature sensor (CT10)
25 – Mix 2 pump
26 – MIX 2 mixing valve actuator
27 – manifold
28 – eSTER room panel
31 – Outdoor temperature sensor (CT10-P)
42 – integrated mixing thermostat
51 – DBT thermostatic cooling valve
52 – cold water inlet
53 – Wastewater outlet

5.11.4 Wiring Diagram No. 4 – Forced connection with a thermostatic mixing valve, storage tank, and emergency cooling

Example of connection to an existing circuit where return protection has already been implemented (e.g., using a Ladomat, a three-way thermostatic mixing valve, etc.). The integrated mixing thermostat must be removed from the boiler.

The thermostatic DBV cooling valve (51) for excess heat dissipation is connected.

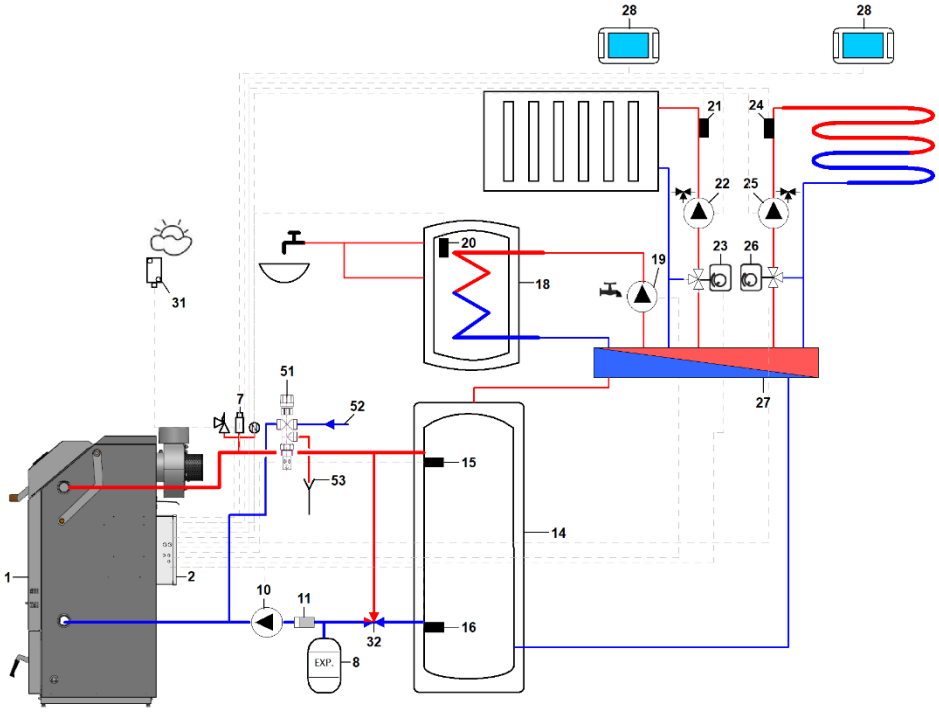

1 – BLAZE HARMONY LAMBDA boiler
2 – controller
7 – safety group (air vent, pressure gauge, safety valve)
8 – expansion tank
10 – boiler pump
11 – filter
14 – storage tank
15 – Upper storage tank sensor (CT10)
16 – lower storage tank sensor (CT10)
18 – DHW tank
19 – DHW pump
20 – DHW temperature sensor (CT10)
21 – MIX 1 temperature sensor (CT10)
22 – MIX 1 pump
23 – MIX 1 mixing valve actuator
24 – MIX 2 temperature sensor (CT10)
25 – Mix 2 pump
26 – MIX 2 mixing valve actuator
27 – manifold
28 – eSTER room panel
31 – Outdoor temperature sensor (CT10-P)
32 – Thermostatic mixing valve (60°C)
51 – DBT thermostatic cooling valve
52 – cold water inlet
53 – drain outlet

5.12 Automatic cooling connection

If the boiler connection does not allow for any other means of dissipating residual heat (see sections 5.10.7 and 5.10.8), it is necessary to connect the automatic cooling system using water from the municipal water supply.
The boiler allows for direct cooling with service water (it does not contain a cooling loop). Cooling water is supplied to the boiler via an emergency thermostatic valve. The valve is usually installed in unused pipe connections on either side of the boiler. The valve and the 3/4" connecting pipe can also be installed on the boiler's outlet and inlet piping (a T-fitting is used instead of an elbow). The valve is not included in the delivery; it can be ordered from the list of accessories.
Service water from the municipal water supply with a maximum inlet pressure of 4 bar is used for cooling; if the pressure is higher, a pressure-reducing valve must be installed. The water supply must not depend on an electrical power supply (a domestic water pump cannot be used). The cooling water outlet is typically connected to the sewer via a hose. A filter must be installed at the cooling water inlet.
If the water temperature in the boiler exceeds 93°C, the thermostatic valve opens and cold water from the municipal water supply flows into the boiler through a 3/4" connecting pipe. Hot water flows out of the valve's outlet nozzle and into the sewer.

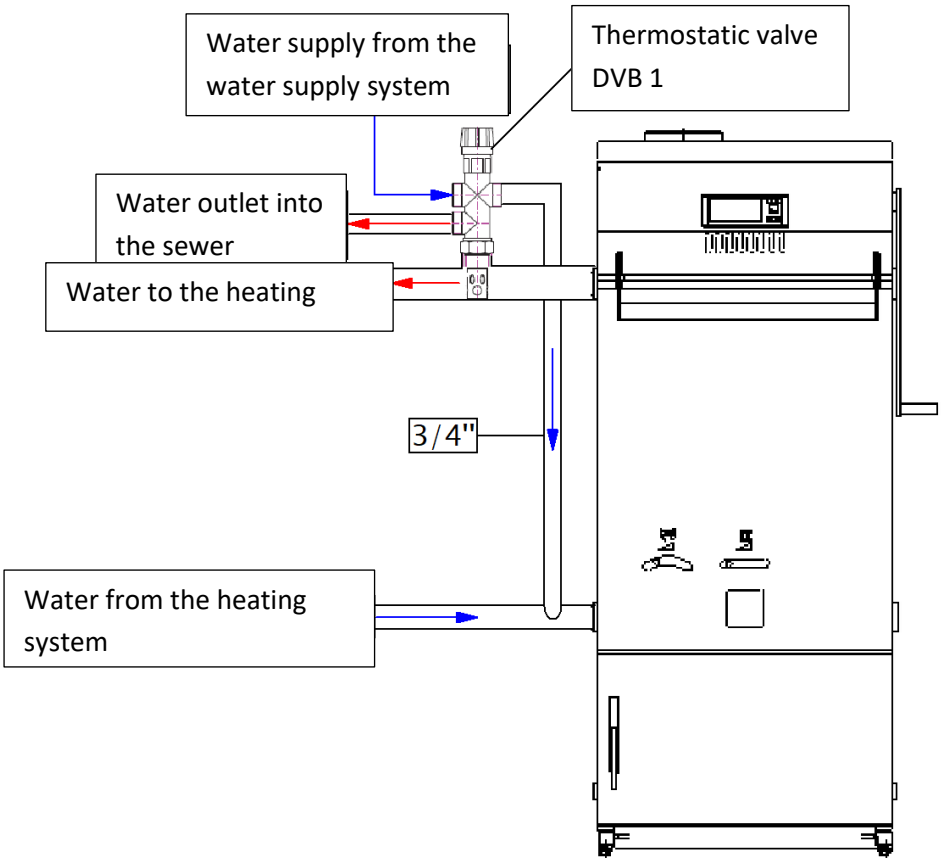

Connection of automatic cooling

5.13 Electrical connection

Information on the electrical connection is provided in a separate document, "Operating and Installation Instructions for the Controller", which is supplied with the boiler.

6 Boiler Operation by the User

To ensure reliable and safe boiler operation, the operator must strictly follow the instructions provided in this boiler operating manual and in the controller operating manual (separate document).

6.1 Initial Start-up

When the boiler is first put into operation, the heat exchange surfaces are metallically clean, resulting in more intense heat transfer. As a result, the flue gas outlet temperature is lower than under standard conditions.

Since the boiler controller calculates the output value based on the flue gas temperature, the actual boiler output during the first firing is approximately 50% higher than the setting on the controller.

Consequently, the burn-out time of the fuel charge is proportionally shorter. Within 2 to 5 operating days, the heat exchange surfaces will be covered with a standard layer of deposits, and the value displayed on the screen will correspond to the actual output.

During initial commissioning, we recommend setting the desired output to 50% and the maximum water temperature to at least 90 °C.

The situation described above is not a malfunction.

6.2 Firing Up

Before heating, it is necessary to check and, if necessary, ensure the following:

- Ensure that the heated building (together with the storage tank) can utilize the generated heat (see Section 5.10.6).
- The functionality of the heating system (circulation pumps, water volume, water pressure, venting, no freezing, etc.).
- Tightness of the upper and lower doors.
- Functionality of the flue pipes (condition, tightness, etc.).
- Functionality of the stoking and combustion chambers (condition, correct assembly of ceramic components, etc.).
- Check that the side and rear heat exchangers, as well as the combustion and stoking chambers, are not excessively clogged.
- Check for foreign objects inside the boiler.
- Functionality of the control and safety components of the boiler and heating system (safety valves, boiler water temperature regulator, thermostats, etc.).
- Connecting the boiler to the electrical grid (230V/50Hz).

Link to video – first firing

The initial firing of the boiler is performed as follows:

1) Lift the door handle and wait a few seconds for the fan to start running at full power.
2) If there is a sufficient layer of charred residue at the bottom of the boiler (at least 20 cm), it is usually enough to light a piece of paper and toss it onto the layer of embers. Immediately add a few pieces of fuel. This ensures that the flames do not shoot upward but flow through the layer of embers, igniting them.
3) If there is not a sufficient layer of charred residue at the bottom of the boiler, stack smaller logs in the stoking chamber. Arrange them so there are gaps between them (crossed over each other). This layer should roughly fill the lower, tapered part of the stoking chamber. Place small wood chips or scraps on top of this layer. Place a crumpled piece of lit paper on top of the chips. It is best if the paper covers the entire surface of the fuel. Then add more logs on top of the lit paper so that the flames do not shoot upward but instead flow downward through the layer of wood.
4) Close the top door so that it remains slightly ajar by 1 to 2 cm. This is achieved by closing the door while pressing down on the closing handle. Allow the fire to burn for about 5 minutes as needed.
5) Once you are sure the fire has caught (by looking through the viewing window or by the rise in flue gas temperature), load the boiler with fuel (see Section 6.3) and close the door properly. When the fire is lit correctly, the boiler will reach its rated output in about 30 minutes. If the flame goes out or dies down, you can briefly open the top door to help it reignite.

After firing up, the controller maintains the boiler output at a higher value to ensure the fuel burns sufficiently and the lining heats up. It then automatically switches to the value set by the operator.

It is prohibited to use flammable liquids for firing. During operation, it is prohibited to exceed the boiler's rated output in any unauthorized manner.

No flammable objects may be stored near the boiler. Ash must be stored in non-flammable containers with lids.

Especially before the first start-up of the boiler, but also after cleaning it, check that the ceramic parts in the combustion chamber are correctly assembled. Incorrect assembly impairs combustion quality, causing the boiler and chimney to become excessively clogged. It is also important to place a plug under the rear fittings; otherwise, the boiler may be damaged.

6.3 Fueling

1) Lift the handle of the upper door and wait a few seconds for the fan to reach full speed and extract any wood gas from the stoking chamber. After ensuring that there is no thick smoke in the stoking chamber and that it cannot ignite suddenly, you can open the door fully.
2) Refill the stoking chamber with fuel. If the base layer is thin, place a few smaller pieces of fuel on top of it.
3) Close the top door. After 2 minutes (default setting), the regulator automatically switches to the START-UP or OPERATION mode, depending on the current flue gas temperature.
4) If a flame does not appear in the combustion chamber or goes out after a while, open the top door slightly again and let the fuel burn for a few minutes.

Do not rake or compress the hot base layer to prevent the nozzle from becoming clogged.

Stack **the logs** in the feeding chamber close together so that there is as little empty space between them as possible. The first logs should be smaller so that the fuel load ignites more easily. The last logs should also be smaller, as they will break down more easily into the base layer.
We prevent **smoke from escaping when adding** fuel by waiting until the previous load has burned down so that only glowing embers—the base layer—remain in the firebox.
You can add fuel by first opening the door only partially and adding just 3 to 4 logs. This covers the glowing layer and prevents it from releasing as much smoke. Then open the door fully and add more fuel.
If smoke enters the boiler room while adding fuel, check whether the flue gas path (flue pipe, chimney) is blocked and whether there is sufficient air supply to the boiler room. If necessary, open the window in the boiler room slightly while adding fuel.
After adding fuel and closing the stoking door, clean the rear heat exchanger by moving the turbulator lever. Always move the turbulator lever to both extreme positions. Leave the lever in the lower position (unless it drops on its own due to the weight of the turbulators). Clean the heat exchanger using the lever after each fuel addition.

Do not open the lower door while the boiler is in operation. Doing so will interrupt combustion and may cause smoke to enter the boiler room.

6.4 Amount of fuel added, refueling intervals

Typically, the fuel chamber is filled to capacity. **However, if the heating system's heat demand is low and the storage tank is already warm, it is necessary to extend the refueling intervals or add smaller amounts of fuel.** However, we do not recommend adding less than half the volume of the fuel chamber. With a small amount of fuel, the burning time may be shortened to the point where a high-quality steady-burning layer cannot form. The residual fuel is then not fully carbonized and smolders. In the case of a smaller fuel dose, turn off the automatic steady-burning function.

Do not add fuel if the storage tank is full and unable to absorb the released heat! There is a risk of overheating and an emergency shutdown of the boiler.

If the heating system with the storage tank were unable to absorb the heat from the fuel charge, overheating (water temperature above 95°C) would occur, leading to an emergency shutdown of the boiler with unburned fuel. Unburned fuel smolders during the shutdown, and the boiler's flue and air passages become clogged with moisture and tar. This jeopardizes proper operation, reduces the service life of the boiler and chimney, and pollutes the air.

Overheating poses a risk of tar blocking the turbulators.

The time the boiler spends in an overheated state is recorded and stored in the controller's memory. If it exceeds 200 hours, the boiler warranty becomes void.

A prolonged shutdown occurs with a base layer of carbon residues that does not contain volatile combustibles or moisture.

6.5 Setting the Desired Output

Boiler output can be controlled using two parameters set on the controller:

- Maximum boiler temperature (70–95°C)
- Preset boiler output (50–100%)

We recommend setting the *"Maximum boiler temperature"* parameter to 95°C and regulating the boiler output by adjusting the *"Preset boiler output"* parameter.

If automatic cooling from the water supply line is enabled, set the maximum water temperature to 90°C.

Do not operate the boiler at a higher output than necessary! This unnecessarily shortens the operating time and extends downtime. We recommend setting the *"Preset boiler output"* parameter to a value between 50 and 70%, and if the output is insufficient during periods of higher heat demand (in the winter months), increase it as needed.

The controller always primarily maintains the set boiler output. If the required boiler output is too high and the water temperature rises to the "Maximum boiler temperature" value, the controller will automatically begin to reduce the boiler output.

6.6 Auto embers maintenance

The boiler is equipped with an "auto embers maintenance" function, which allows the fan to be shut off even before the fuel charge has completely burned out. This leaves a glowing base layer in the boiler for another 6 to 10 hours, eliminating the need to reignite the fire. Detection of the base layer burning out is ensured by a movable detection arm in the front wall of the stoking chamber. After stoking, this arm is pressed against the wall by the fuel. During operation, the fuel level gradually drops and the arm is gradually exposed. When the fuel level drops below the end of the detection arm, the arm is released and, under the action of a counterweight, tilts into the stoking chamber. This activates a sensor in the air panel, which informs the controller that the boiler contains a base layer at the maximum set size (100%).

A red log appears on the controller display in the section showing boiler output information. If the *"Hot emberslayer size"* parameter is set to 100%, the controller switches the boiler to steady-burning standby immediately after the detection arm tilts. If the size of the steady-burning layer is set to a lower value (90% to 10%), the boiler continues in OPERATION mode for a certain period of time so that the remaining fuel can burn out and the steady-burning layer reaches the desired size. During this burn-out, the log symbol on the display flashes.

After the next fuel addition, the detection arm is again pressed against the wall by the fuel, and the color of the log icon on the display changes to yellow, then green.

When the stoking door is opened, the pressing mechanism linked to the door presses the detection arm against the wall of the stoking chamber so that it does not obstruct fuel loading. When the door is closed, the pressing mechanism releases the detection arm again.

Opening the stoking door for longer than 10 seconds (adjustable parameter) in STOP mode will switch the system to the START-UP mode. If no new fuel is added, the remaining base layer of charcoal will burn out. Therefore, only look into the boiler briefly.

The boiler may shut down permanently only after 30 minutes (adjustable parameter) following refueling. During this time, the log icon on the display is shown in yellow—see the image below. This feature prevents unintended boiler shutdown during the initial firing phase when there is only a small layer of fuel in the boiler.

Green – there is fuel in the boiler, the minimum operating time **has been** reached.

Red – there is no fuel in the boiler.

Yellow – there is fuel in the boiler, the minimum operating time **has not** been reached.

Color-coded fuel indicator

The size of the base layer can be set as a user parameter on the boiler controller.

The optimal bed should roughly fill the lower, tapered part of the stoking chamber. The bed must not contain smoldering fuel residues, as these clog the boiler with tar during downtime.

The boiler is equipped with a "MAINTENANCE RUN" function, which ensures that the bed remains hot during downtime and that ignition is not necessary when refueling. In STOP mode, this function switches the fan on at regular intervals. The intensity of MAINTENANCE RUN can be adjusted. During longer shutdowns (over 8 hours), we do not recommend using this function, as it leads to an excessive reduction in the size of the bed (for firing, a sufficient bed—even if extinguished—is more valuable than a small bed, even if glowing).

If the automatic smoldering function is turned off (the log symbol is not displayed), the boiler will shut down only after the fuel has completely burned out and the flue gas temperature has dropped below the set value (service parameter).

6.7 Combustion Control with Lambda Probe

BLAZE HARMONY LAMBDA series boilers are equipped with a lambda probe that measures the amount of residual oxygen in the flue gases (7 to 9%). Based on this information, the controller operates the servo-actuators of the pre-air, primary air, and secondary air dampers, ensuring continuous optimization of the combustion process in the boiler.

Under normal circumstances, the customer does not intervene in the combustion air regulation process. Everything happens automatically via the lambda probe, the controller, and the servo-actuator of the combustion air sliding damper.

6.8 Boiler Cleaning

Ash removal from the boiler is performed either when the boiler is cold or after the boiler has been shut down due to fuel detection prior to the next firing. Regular boiler cleaning results in higher efficiency and thus lower fuel consumption. For more convenient cleaning, an ash vacuum cleaner can be used. Ash must be stored in non-flammable containers with lids. When cleaning, we recommend keeping the exhaust fan on (lifting the door handle will cause the fan to start running at full power after a few seconds).

The boiler comes standard with the following cleaning tools:

1.	2.
Rake	**Hook**

Tubular heat exchanger:

The boiler is equipped as standard with mechanical turbulators, which are used to clean the rear flue gas heat exchanger. Cleaning is performed after each stoking and closing of the stoking door by moving the turbulator lever. It is always necessary to move the turbulator lever to both extreme positions. Leave the lever in the lower position (unless it drops on its own due to the weight of the turbulators). Clean the exchanger using the lever after each stoking.

Failure to clean the exchanger regularly (by moving the turbulator lever) may result in clogging and blocking of the turbulators. Subsequent restarting can be very labor-intensive. It requires opening the exchanger cover, removing the individual turbulators, cleaning them, and then reinstalling them.

Feeding chamber:

The stoking chamber is cleaned through the top door using the “Hrablo” cleaning tool. Every two weeks, visually inspect the stoking chamber walls, the inner surface of the top door, and the baffle for soot buildup.

Procedure for cleaning the stoking chamber and door:

- Open the top door and scrape ash and deposits off the screen.
- Scrape the walls of the stoking chamber.
- Use a brush to sweep the bottom of the stoking chamber so that the loosened deposits fall into the combustion chamber.
- After cleaning the stoking chamber, the combustion chamber must also be cleaned.

Link to video – cleaning the stoking chamber and door

Combustion chamber:

The combustion chamber is cleaned through the bottom door using the “Rake” and “Hook” cleaning tools. Every 2 weeks, it is necessary to remove the heat exchanger plug (see Boiler Diagram, item 45) and clean the bottom of the combustion chamber, including the space under the tube heat exchanger.

Procedure for cleaning the combustion chamber:

- Remove the heat exchanger plug.
- Using the “Rake” cleaning tool, remove deposits from the walls of the combustion chamber, the ceiling (around the nozzle), and the area under the rear heat exchanger.
- Then, using the “Hook” cleaning tool, clean the area and walls behind the rear fittings.
- Remove all scraped-off ash and deposits accumulated at the bottom of the combustion chamber and in the space below the tube heat exchanger from the boiler using the “Rake.”
- Then return the plug to its original position in the combustion chamber.

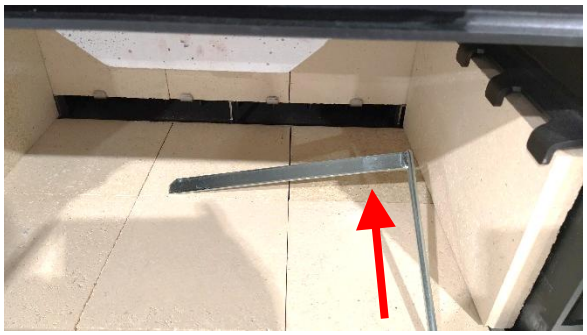

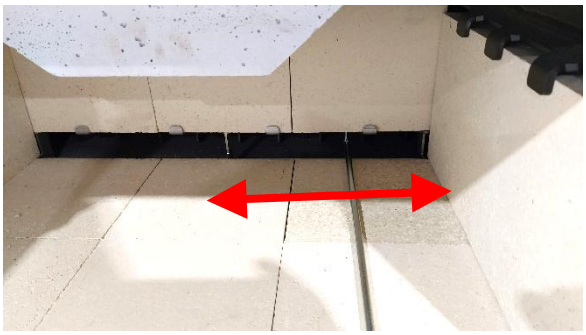

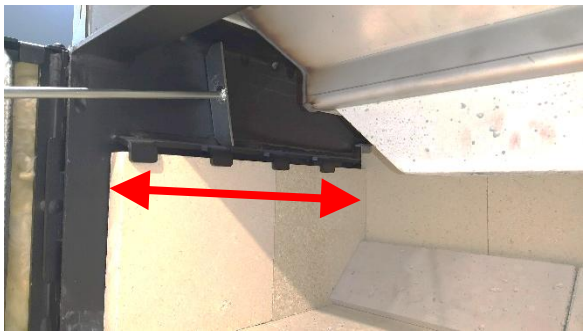

Video link – cleaning the combustion chamber:

Exhaust fan:

The exhaust fan should be cleaned at least once a year or if it becomes excessively noisy. Cleaning is performed using a putty knife and a wire brush.

Procedure for cleaning the exhaust fan:

- Disconnect the power cord from the fan.
- Unscrew the 4 nuts and remove both flanges (half-moons) from the fan.
- Remove the motor with the impeller from the fan housing.
- Scrape deposits from the inner walls of the fan housing.
- Remove (vacuum) any loose ash and deposits from the fan housing.
- Remove the impeller from the fan motor. **CAUTION! The fan impeller nut has a left-hand thread!**
- Carefully clean the fan impeller and motor flange with a wire brush and a putty knife.
- Reassemble the exhaust fan in the reverse order.

Video link – Cleaning the exhaust fan:

It is recommended to replace the starting capacitor on the exhaust fan once a year. Its replacement may only be performed by an authorized person (service technician). The boiler must be disconnected from the mains power supply at that time!

Regular cleaning and maintenance of the boiler is essential to ensure the equipment's long service life. If the boiler is not cleaned regularly and properly, all components are subjected to greater thermal stress, which may result in damage. Damage caused by neglected boiler maintenance is not covered by the warranty!

The composition of wood ash depends on the fuel used. Ash must be handled or disposed of in accordance with applicable local requirements. Where permitted and where its composition is suitable, it may be used as a fertilizer. Any carbon residues can be separated using a sieve and added to the boiler along with the fuel.

6.9 Taking the Boiler Out of Service

When taking the boiler out of service for an extended period, we recommend cleaning its heat exchange surfaces and removing the ash from the boiler (see Section 6.8).
Once per heating season, we recommend removing all components from the combustion chamber, cleaning the boiler walls, and sweeping out the ash. When reassembling, we recommend rotating all components so that the opposite side is exposed to the heat. This will extend their service life.

6.10 Operational Inspection and Maintenance

Boiler and Heating System
The operator is required to ensure ongoing inspection of the equipment and its necessary maintenance. No special qualifications are required for this activity; training provided during boiler commissioning is sufficient.
It is necessary for the boiler to be checked occasionally by the operator during operation. In particular, it is necessary to ensure that the outlet water temperature does not exceed 95°C. Furthermore, the water level (pressure) in the system must be checked.
The condition of the ceramic components and the tightness of both doors must be checked regularly.

Chimney and flue pipes
It is necessary to check the tightness and alignment of the flue pipe and the patency of the chimney flue. A layer of fly ash accumulates in the chimney during operation and cleaning. This must be removed through the chimney door to prevent clogging of the chimney flue (at least once per season).
Leaks at the joints of the flue pipe and chimney doors can be sealed with sealant or by taping them with aluminum tape.

Door Tightness
It is necessary to check the door seal. The edges of the stoking openings must be lightly pressed into the sealing cord. Re-sealing is performed by replacing the sealing cord. A proper seal (correct fit) is indicated by a smooth imprint of the sealing surface of the boiler body on the cord. If the imprint is rough and covered with soot and tar deposits, this indicates a leak. This is particularly likely with the sealing cord of the stoking doors.

Lambda Probe
After the heating season, remove the lambda probe from the exhaust fan and clean off any dirt with a dry, soft cloth. Do not use any cleaning agents! Then calibrate the lambda probe according to the operating and installation manual for the boiler controller.

Before handling the lambda probe, make sure the boiler is disconnected from the mains power supply!

6.11 Poor combustion, frequent operating errors

Poor combustion is indicated by foul-smelling smoke, excessive soot buildup in the flue gas heat exchanger or flue, reduced output, and increased fuel consumption. The cause is usually improper operation, e.g.:

- **Incorrect firing of a clean boiler:** We recommend filling the hopper with pieces of fuel (well-dried, ideally hardwood) so that after ignition and closing the door, the flame remains stable. The flame may weaken, but it must not die down or go out.
- **Unsuitable fuel:** Large logs and significant gaps between them, excessive moisture in the fuel. Softwood, in particular, burns more poorly and must be dry and split (into pieces of approx. 15 cm). Pieces that are too long may get stuck in the firebox. For the maximum log length, see Chapter 3. Do not place large pieces of wood at the bottom of the firebox, as they will not break down in time and will get stuck above the funnel. Do not place large pieces on top of the load either, as they will not have time to form a steady-burning layer and will smolder after the fire is turned off. We recommend stacking irregular pieces with minimal gaps between them.
- **Insufficient fuel charge:** We recommend always using a full fuel charge. A half-charge burns quickly and struggles to form a high-quality steady-burning layer.
- **Boiler output set too low:** Especially when combined with a clogged boiler or unsuitable fuel.
- **Operation with a clogged boiler:** An excessive amount of ash in the combustion chamber and heat exchanger passages is undesirable. The metal walls of the flue gas passages and the combustion chamber must be cleaned regularly—see Section 6.8. Consider the clogging of the turbulators as a valuable warning that something is wrong with the boiler's operation.
- **Loading fuel when the required heat extraction is not ensured:** The building and the storage tank will not absorb the heat from the fuel charge, resulting in a shutdown with smoldering fuel. Before adding fuel, it is necessary to determine the tank's available capacity (e.g., the threshold temperature in freezing conditions is approx. 60°C; at outdoor temperatures above 0°C, approx. 50°C).
- **Improper interference with boiler operation:** Shutting down the boiler before the fuel has burned down to a steady-burning layer, resetting the operating time via the control panel, or peering into the stoking chamber.

7 Possible faults and their solutions

7.1 Boiler overheating

If the water temperature in the boiler **exceeds 95°C** (service parameter), the controller will shut down the boiler, i.e., turn off the fan.

If the water temperature in the boiler **exceeds 97°C**, the independent STB emergency thermostat will cut off the fan's power supply. The display and other devices remain operational. To restart the boiler, unscrew the cover of the STB emergency thermostat button on the boiler control unit panel (see Boiler Diagram, item 7) and press the STB thermostat button with a thin object. The emergency thermostat cannot be reset until the temperature in the boiler drops below approximately 70°C.

Video link - Restarting the STB thermostat after overheating

7.2 Power Outage During Operation

If the boiler's power supply is interrupted (e.g., power outage, switching off the main switch), the exhaust fan will shut off and the combustion air intake damper will close. This reduces the boiler's output. If the boiler is not connected to a backup power source, all connected circulation pumps will also shut down. The hot fuel bed and lining continue to release heat for approximately 1 hour. To prevent the boiler from overheating, this residual heat must be reliably dissipated – see sections 5.10.7 and 5.10.8.
The amount of residual heat is approx. 5–10 MJ, depending on the current output and the amount of fuel burned before shutdown.

7.3 Fault in flue gas oxygen control

A fault in flue gas oxygen control is indicated by a missing or obviously incorrect oxygen value displayed on the screen. Possible causes include:

- incorrect oxygen measurement by the lambda probe
- damage to the lambda probe
- damage to the sliding damper actuator
- damage to the controller's transducer

If the lambda probe is measuring oxygen incorrectly (for a boiler that has gone out in fresh air, this value is 21% with a permissible tolerance of ±2%), calibrate it—see the separate boiler controller manual.
In other cases, the boiler can be operated in emergency mode, but the air supply must be adjusted manually.
Even under these circumstances, we ensure that combustion proceeds as efficiently as possible. Incomplete combustion reduces boiler efficiency and produces excessive amounts of harmful substances (hydrocarbons, particularly tar), which pollute the atmosphere and clog the boiler and flue pipes. The quality of combustion is not determined solely by the type and moisture content of the fuel; it can also be significantly influenced by how we feed the fuel and how we regulate the output.
During emergency operation, we can assess the quality of combustion by observing the flame through the viewing window. Smoke emerging from the chimney during high-quality combustion is not visible at all. Light white smoke that dissipates immediately is not a problem; it is caused by water vapor produced during combustion.

Do not confuse smoke with steam. Combustion gases contain water vapor, which condenses above the chimney and creates a mist (similar to gas heaters). Usually, unless it is very humid, the mist dissipates (evaporates) within a few meters.

The key to high-quality combustion is the correct amount of secondary air.

An excess of secondary air causes a large portion of the air to not participate in combustion, cooling the flame and carrying heat uselessly up the chimney. The flame is sharp, flickering, or non-existent. The carbon residues in the combustion chamber, which the flame is licking, have a light yellow color at the edges. **It is necessary to reduce the amount of secondary air, i.e., move the damper to the left**.

A lack of secondary air causes part of the fuel to remain unburned and escape into the chimney. The flame is long and sometimes smokes. The carbon residues in the combustion chamber, onto which the flame strikes, have the same color across their entire surface. Smoke emerges from the chimney and does not dissipate, even when the air humidity is lower. **It is necessary to increase the amount of secondary air, i.e., move the damper to the right**.

Pre-drying air (the right half of the damper range) is intended only for fuel that burns very poorly when the damper is set to the middle position, e.g., softwood, unsplit logs.

Incorrect use of pre-drying air (with high-quality fuel) can cause the chamber walls and stoking door to overheat and become damaged.

The amount of secondary air is adjusted manually in emergency mode using a sliding damper (see Boiler Diagram, item 8).

Approximate secondary air settings by fuel type:

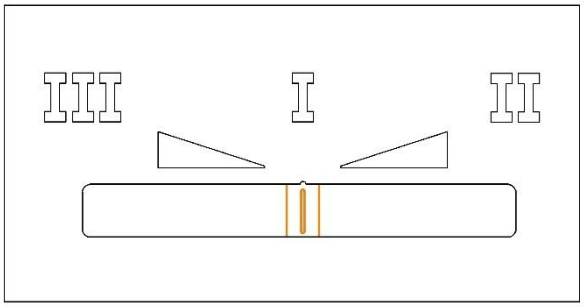

Diaphragm in the middle

- Standard wood – damper in the middle.

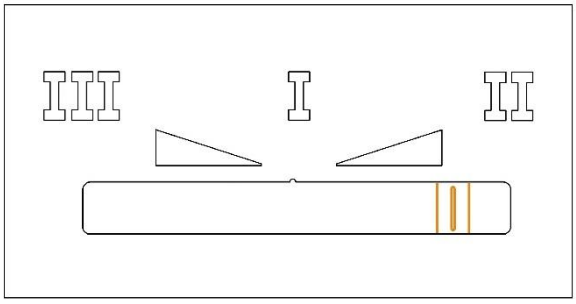

Diaphragm on the right

- Hardwood (beech, oak) – more secondary air – damper to the right

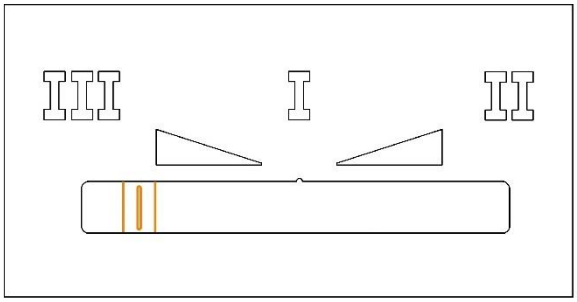

Diaphragm on the left

- Softwood, unsplit logs – minimal secondary air (maximum primary and pre-drying air) – left damper

7.4 Boiler operation without electricity

The boiler is capable of emergency operation using only chimney draft.
If the boiler's configuration allows for sufficient natural circulation, the boiler can be operated using chimney draft by removing the front cover, sliding the damper to the left, and ensuring that the air dampers remain open (similar to when checking their functionality). This prevents the boiler from becoming clogged by smoldering unburned fuel during an emergency shutdown, or the building from becoming too cold.
If the boiler is operated in this manner without electricity and the output or chimney draft is insufficient, the turbulators can be removed from the boiler's tube heat exchanger. This will increase the flue gas temperature and also increase the chimney draft. It is also possible to remove the bottom plug from the space below the heat exchanger.
At a chimney draft of 10 Pa, the boiler operates at 30% output; at a draft of 20 Pa, the output is approximately 75%.

A boiler operated in this manner must be under constant supervision. It is necessary to ensure (by stoking the fire or partially closing the combustion air openings) that the water temperature in the boiler does not exceed 95°C.

7.5 Other faults and their solutions

Problem	Cause	Solution
The controller display is not working.	Blown internal fuse on the control module.	Replace the fuse (service technician, qualified electrician).
	Loose or disconnected display data cable connector on the panel or controller module; damaged cable.	Check the connector, replace the damaged part (service technician, qualified electrician).
	Damaged display.	Replace the display (service technician, qualified electrician).
	Damaged controller.	Replace the controller (service technician, qualified electrician).

The turbulator lever cannot be moved.	Poor combustion, irregular use of the turbulators. Frequent boiler shutdowns with excess fuel (overheating).	Remove the top cover, open the rear heat exchanger cover, gradually bend both arms outward, remove the guide rail, and move the turbulators individually. If necessary, tar can be dissolved using a suitable solvent (alcohol-based).
The fan does not rotate in OPERATION mode.	The water temperature is above the required value. Boiler overheating and activation of the STB emergency thermostat. Fan impeller jammed. The regulator fuse has blown. Motor malfunction. Damaged controller.	Change the set value. Once the water temperature in the boiler drops below approx. 80°C, unscrew the emergency thermostat cover and press the switch with a suitable object (e.g., a pencil). Remove the cause (foreign object, clogging). Replace the fuse (service technician, qualified electrician). Replace the motor (service technician, qualified electrician). Replace the controller (service technician, qualified electrician).
No heat-retaining layer remains in the boiler.	The “Automatic Constant Heat” function is turned off in the controller settings. Leak in the air intake damper (see Boiler Diagram, item 19) under the front cover of the boiler. Damaged induction sensor (the red LED does not light up). The detection arm did not move due to being immobilized by soot buildup. This may be caused by frequent boiler shutdowns with a large amount of fuel (overheating). During constant heat maintenance, the door was opened (for longer than 10 seconds) and the constant heat burned out.	Activate the “Automatic Constant Heat” function in the controller menu. Check the damper for leaks with the fan turned off; adjust the damper if necessary (service technician). Replace the sensor (service technician). Remove the air panel and repair the fault. Do not open the door while maintaining a constant temperature.
The exhaust fan is making excessive noise.	The impeller is contaminated with soot. This may be caused by frequent boiler shutdowns with a large amount of fuel (overheating).	Remove the fan motor. Clean it and eliminate the cause of the clogging.

The exhaust fan is running continuously at full power (IGNITION, STOKING mode).	The door sensor is not properly adjusted. The door sensor is damaged.	Remove the front cover and check the tightness of the sensor, or its distance from the protrusion on the stoking door handle. Adjust the sensor so that it is as close as possible to the protrusion on the handle. Replace the door sensor (service technician).
The boiler shuts down during operation with the message “low fuel”.	The detection arm is bent and is sending a signal that the boiler is out of fuel. Faulty overheat detection sensor.	Remove the front cover, remove the cover under which the arm counterweight is located. Check that the arm is tightened and that it is not mechanically bent. It should be L-shaped (opening the door should lift the counterweight). Replace the ember detection sensor (service technician).
The boiler is unable to increase output (after closing the stoking door, the flue gas temperature drops to low values).	The boiler has no air supply or the flue gas path is blocked.	Check all 3 air intake dampers to ensure they are not stuck. Clean the entire flue gas path (behind the seal and the rear wall of the firebricks in the combustion chamber; check that the turbulators are not clogged; inspect the fan, the flue pipe, and the chimney).

When troubleshooting, always disconnect the boiler from the mains power supply first! If the boiler unit also controls a backup heat source, it is necessary to disconnect it from the mains power supply as well.

To ensure proper function and safe operation, boiler repairs must be performed **exclusively** by **personnel from authorized service centers**.

Warranty and post-warranty boiler repairs are provided by BLAZE HARMONY s.r.o. through its **specialized service centers and contractual partners.**

8 Further information

8.1 Properties of Different Types of Fuel

We do not recommend burning damp wood. Burning undried wood reduces its effective calorific value, which results in increased fuel consumption. Furthermore, burning damp wood increases the water vapor content in the flue gases, thereby raising their dew point. This can result in moisture condensation and a shortened service life of the boiler or chimney. Proper natural drying of wood takes two years for softwood and split logs, and three years for hardwood.

The calorific value of all types of wood is roughly the same, approximately 15 MJ/kg at 15% moisture content. Hardwood (with a high specific gravity) is more suitable if a longer burning time is desired.

Typical density of common wood species in kg/m³(cubic meter) at 15% moisture content:

acacia	750	hornbeam	680	alder	520
pine	500	ash	670	spruce	450
birch	630	maple	660	poplar	450
beech	670	linden	490	willow	440
oak	690	larch	590		

The density of wood stacked in piles (cubic meter) is 60 to 80% of the density of loose wood (cubic meter).

8.2 Fuel consumption, frequency of stoking

Fuel consumption per season depends on many factors:

- the building's heat loss (the power required to heat the building at approximately -15°C)
- boiler operating efficiency (fuel quality, level of operation, and output control)
- the location of the boiler room (whether heat from the boiler surface and chimney contributes to heating the building)
- the temperature to which the building is heated (a 1°C increase in indoor temperature corresponds to an approx. 5% increase in fuel consumption)
- if the boiler is used for DHW heating, what is its consumption
- the average outdoor temperature during the heating season (differences can be ±20%)
- whether the entire building or only part of it is heated, how significant the heat loss through ventilation is, etc.

Typical seasonal consumption for a single-family home with a heat loss of 15 kW is approximately 10,000 kg of dry wood, which is approximately 30 m³ (cubic meters).

Daily consumption is proportional to the outdoor temperature. Example of typical daily consumption for a single-family home with a heat loss of 15 kW during the heating season using a BLAZE HARMONY 25 LAMBDA boiler:

Number of days	outdoor temperature	average boiler output	daily fuel consumption	number of stoking sessions per day
5 days	-8°C	55%	75 kg	3 times
30 days	-5°C	45%	60 kg	2–3 times
30 days	-2°C	40%	50 kg	2 times
70 days	2°C	30%	45 kg	2x
50 days	6°C	20%	40 kg	1–2 times
50 days	10°C	10%	20 kg	1x

8.3 Heat loss from a building, methods for determining it

- Heat loss is a parameter defined by standards. It corresponds to the heat output required to heat a building to a specified temperature (21°C for residential spaces) at a standard design outdoor temperature. In the Czech Republic, this temperature ranges from -17°C to -12°C, depending on the building's location (lowlands, highlands).

- The heat loss value must be correctly determined based on the building's parameters (floor area, wall thickness, wall material, window type, design outdoor temperature, etc.). The calculation is performed by a designer, or a publicly available application can be used, e.g.: https://www.tzb-info.cz/tabulky-a-vypocty/107-vypocet-tepelne-ztraty-objektu-dle-csn-06-021.
- Heat loss can be roughly estimated based on the building's floor area. For a typical uninsulated single-family home in the Czech Republic's climate zone, heat loss is approximately 40 W per 1 m³ and for an insulated home, approximately 20 W per 1 m³.
- Heat loss can also be estimated based on the current fuel consumption per season:

Fuel consumption for **1 kW of** heat loss in a building.

Fuel	Estimated overall efficiency	Seasonal consumption
Dry wood	70%	650 kg (1.5–2 m³)
Wood briquettes	70%	600 kg
Wood pellets (automatic boiler)	77%	550 kg
Coal (manually fed boiler)	70%	600 kg
Coal (automatic boiler)	77%	550 kg
Gas	85%	260 m³ (2,400 kWh)
Propane	85%	185 kg
Electricity	100%	2,000 kWh
District heating	100%	2,000 kWh (7,200 MJ = 7.2 GJ)

9 Safety Instructions

Only equipment that has been installed and commissioned in accordance with the documentation and is in proper technical condition may be operated.

Safety regulations must be observed when handling the product to its destination. For transport, only tools and transport equipment designed for this purpose with the appropriate load capacity may be used (the product's weight is specified in Chapter 2).

Inspections of flue gas pathways and chimneys must be conducted in accordance with applicable regulations. The flue pipe must be securely connected to the chimney flue. Flue pipes must be mechanically sound, airtight against flue gas leakage, and cleanable. The condition of the chimney must be checked regularly. The cleaning opening in the chimney must be securely closed to prevent smoke driven by the fan from escaping into the surrounding area through leaks. Only one boiler may be connected to a single chimney flue. Connecting an appliance to a chimney flue must always be done with the approval of the relevant chimney sweep guild. Flue pipes must not be routed through third-party utility or residential spaces. The internal cross-section of the flue pipe must not be larger than the internal diameter of the flue opening and must not taper toward the flue opening.

With the exception of approved solid or liquid fire starters, it is prohibited to use flammable liquids (gasoline, oil, etc.) for kindling.

Repairs to the boiler may only be performed when the boiler is extinguished and disconnected from the electrical grid.

Tampering with the boiler or its electrical connections is prohibited!

The boiler may only be connected to a suitable 230V/50Hz outlet or a distribution panel. After installation, the outlet or distribution panel must be accessible without restriction.

The boiler room must be adequately lit.

Work on the boiler's electrical components may only be performed by a qualified professional.

The installation and operation of the boiler (boiler room) must comply with applicable design, safety, and health regulations.

Boiler operation must follow the assembly, installation, and operating instructions.

The boiler operator must be a person over 18 years of age who is familiar with the manual and the operation of the appliance. Leaving children unsupervised near boilers that are in operation is prohibited. Boilers must be under occasional supervision by the operator during operation.

Protective gloves and safety goggles must be worn during all activities related to boiler operation.

Flammable objects must not be placed on the boiler or near the fuel loading and ash removal openings. Ash must be disposed of in non-flammable containers with lids. Always take due care, as the outer surfaces of the boiler may be hot to the touch.

If there is a risk of flammable vapors or gases forming and entering the boiler room, or during work that creates a temporary risk of fire or explosion (such as installing floor coverings or painting with flammable paints), the boiler must be taken out of service in a timely manner before work begins.

The operator is required to inspect the boiler and safety equipment at least once a year and verify functionality according to local operating conditions. If the boiler is connected to a dedicated pressure vessel (e.g., an expansion tank), the operator is required to ensure inspections are performed in accordance with applicable regulations.

WARNING! The boiler may only be used for the purposes for which it is intended.

10 Disposal of shipping packaging

- Dispose of the polyethylene cover film in a plastic recycling bin
- Disassemble and burn the wooden shipping pallet

11 Disposal of the boiler at the end of its service life

- Clean the boiler and disassemble it into individual parts
- Take the metal parts to a scrap metal collection point
- Dispose of ceramic parts as household waste or use them as building material
- Dispose of insulation boards and sealing cords as household waste

12 Related standards

Heating system

EN 303-5:2022	Boilers for central heating

Fire safety regulations

EN 13501-1	Fire classification of construction products and building structures

Electrical

EN 60445 ed. 2	Basic and safety principles for human-machine interfaces, marking, and identification – Marking of equipment terminals and ends of certain selected conductors, including general rules for the alphanumeric system
EN 60079-14-2	Electrical equipment for explosive gas atmospheres – Part 14
EN 60 446	Basic and safety principles for the operation of machinery – Color or numerical marking of conductors
EN 50 165	Electrical equipment of non-electrical household appliances. Safety requirements
EN 55 014-1	Electromagnetic compatibility – Requirements for household appliances – Part 1
EN 60335-1 ed.2 2003+1:2004+A11:2004+A1:2005+2:2006+A12:2006+A2:2007+3:2007+Z1:2007	Household and similar electrical appliances – Safety – Part 1: General requirements
EN 60335-2-102	Household and similar electrical appliances – Safety – Part 2

13 Warranty Terms

BLAZE HARMONY LAMBDA series boilers are manufactured and tested in accordance with applicable documentation and comply with the EN303-5:2022 standard for central heating boilers.

The warranty period for the pressure-bearing parts of the boiler is 84 months. The warranty period for consumable parts is 12 months. The warranty period for other components is 24 months.
The warranty period begins on the date the boiler is first put into operation, but no later than 6 months after the date the boiler is shipped from the BLAZE HARMONY s.r.o. manufacturing plant.
The warranty applies only to boilers operated in accordance with the instructions provided in the assembly, installation, and operating manual and commissioned by an authorized company.
Consumable parts include ceramic fittings, sealing cords, and heat-resistant steel components in the lower combustion chamber.

If a defective boiler part needs to be replaced under warranty, the end user should contact the authorized service organization that commissioned the boiler, or another local company with a valid license to commission and service BLAZE HARMONY s.r.o. boilers. That organization will request a new replacement part from the service department of BLAZE HARMONY s.r.o. If the service department of BLAZE HARMONY s.r.o. determines that the claim is valid, it will immediately send the relevant replacement part to the service organization. The service organization will then replace the part on the boiler at the customer's location.

The warranty does not cover, among other things, malfunctions caused by:

- connecting the boiler to a water pressure greater than 300 kPa
- the use of fuel other than the recommended type
- incorrect operation (e.g., frequent shutdowns and overheating of the boiler)
- connecting the boiler to a power supply other than 230V/50Hz or to a faulty power supply
- untreated water (e.g., limescale buildup in the boiler)
- due to improper operation and mechanical damage to parts
- an improperly sized or improperly installed heating system
- rough handling, tampering with the boiler's structure, natural disasters, improper storage, or other reasons beyond the manufacturer's control
- boiler overheating and the resulting downtime. The warranty is void if the overheating time exceeds 200 hours (*MENU => Information => Service Counters*)

Failure to comply with the above will result in the loss of the warranty.
For warranty claims, contact the service and installation company that commissioned your product.
If the boiler is initially commissioned by an unauthorized person, the product warranty is void!
Immediately after commissioning the boiler, the manufacturer must be sent a properly completed and signed **"Warranty Certificate and Boiler Commissioning Checklist and Heating Test Report**." Without fulfilling this condition, the manufacturer cannot recognize the repair as covered by the warranty.
When reporting a defect, the following must be provided:

- the boiler's serial number
- date of installation
- the authorized company that commissioned the boiler
- circumstances of the malfunction (description of the malfunction)

The manufacturer reserves the right to make changes as part of product innovation that may not be included in the manual.

14 WARNING!

Please send the properly completed warranty certificate for the BLAZE HARMONY LAMBDA boiler to the address below:

BLAZE HARMONY s.r.o.
Trnávka 37
751 31 Lipník nad Bečvou
Czech Republic

Or by email to: zarucak@blazeharmony.com

15 Record of repairs performed

Record of warranty and post-warranty repairs and product inspections			
Date of record	**Work performed**	**Contract service organization (signature, stamp)**	**Customer signature**

BLAZE HARMONY s.r.o.
Trnávka 37, 751 31 Lipník nad Bečvou
Czech Republic
Email: info@blazeharmony.com, www.blazeharmony.com

Revision date: 2026-10-19