INSTRUCTION MANUAL FOR THE OPERATION AND INSTALLATION OF GASIFICATION BOILERS

BLAZE NATURAL PLUS 17

BLAZE NATURAL PLUS 25

BLAZE NATURAL PLUS 40

BLAZE HARMONY s.r.o.
Trnávka 37, 751 31 Lipník nad Bečvou
Czech Republic
E-mail: info@blazeharmony.com, www.blazeharmony.com

Dear customer,

Congratulations on your choice and purchase of the BLAZE NATURAL PLUS boiler. You are becoming a user of a boiler with top parameters. To ensure that the boiler serves you well, reliably, and for a long time, operate it in accordance with the instructions in the manual, paying particular attention to chapters 6, 7, and 8.

We greatly appreciate your trust and would welcome feedback on the operation and use of the boiler.

Copyright 2017 BLAZE HARMONY s.r.o.

All rights reserved.

All text and images are subject to copyright and other intellectual property protections.

Printing errors reserved.

1 Advantages and applications of the boiler 5
1.1 Advantages of the boiler 5
1.2 Use of the boiler 6
1.3 Advantages and disadvantages of operation without an accumulation tank 6
1.4 Conditions for operating a boiler without an accumulation tank 6
1.5 General conditions for connection and operation (with and without an accumulation tank) 7
2 Technical data of the boiler 9
3 Prescribed fuel 10
4 Boiler description 10
4.1 Boiler design 10
4.2 Function description 11
4.3 Boiler dimensions 12
4.4 Detail and description of the control and signalling elements of the boiler regulator 17
5 Boiler assembly and installation 18
5.1 Checking the quality and completeness 18
5.2 Removing parts of the boiler before relocation to the boiler room 18
5.3 Disassembly of the transport pallet 19
5.4 Handling the boiler 21
5.5 Placing the boiler in the boiler room 22
5.6 Switching the lower door 23
5.7 Installation of the exhaust fan 23
5.8 Connection to the chimney 23
5.9 Supplying air to the boiler 24
5.10 Heating system design, connection of the boiler 25
5.10.1 Integrated-mixing system 25
5.10.2 Installation of the integrated-mixing thermostat 26
5.10.3 Size of the accumulation tank 27
5.10.4 Connection “boiler – accumulation tank” with gravity circulation (without pump) 27
5.10.5 Connection “boiler - accumulation tank” with forced circulation (with pump) 28
5.10.6 Residual boiler output 28
5.10.7 The most suitable method for dissipating residual heat 29
5.10.8 Other methods of dissipating residual heat 29
5.10.9 Water 29
5.10.10 Open expansion vessel 29
5.10.11 Connection of the boiler to an existing system 29
5.10.12 Connection of the boiler with an accumulation tank 29
5.10.13 Connection of the boiler without an accumulation tank 30
5.10.14 Condition of non-disconnection of the system 30
5.10.15 Gravity circulation valve BLAZE HARMONY 30
5.11 Hydraulic connection diagrams 32
5.11.1 Connection diagram 1 – gravity circulation setup 32
5.11.2 Connection diagram 2 – combined setup with a pump in a bypass with an injector 33
5.11.3 Connection diagram 3 – forced setup with gravity circulation cooling into the heating system 34
5.11.4 Connection diagram 4 – forced setup with gravity circulation cooling into the DHW tank 35
5.11.5 Connection diagram 5 – forced setup with emergency cooling 36
5.11.6 Connection diagram 6 – forced setup with a thermostatic mixing valve and emergency cooling 37
5.11.7 Connection diagram 7 – gravity circulation setup with an accumulation tank 38
5.11.8 Connection diagram 8 – combined setup with an accumulation tank with an injector 39

5.11.9 Connection diagram 9 – forced setup with an accumulation tank 40
5.11.10 Connection diagram 10 – forced setup with a thermostatic mixing valve, accumulation tank and emergency cooling 41
5.12 Connection of automatic cooling 42
5.13 Electric connection 42
5.13.1 Boiler pump connection 42
6 Boiler operation by the user 43
6.1 First commissioning of the boiler 43
6.2 Ignition, refuelling 43
6.3 Amount of loaded fuel, refuelling intervals 45
6.4 Setting the desired boiler output 46
6.5 Automatic stable ember level function 46
6.6 Control and adjustment of combustion 46
6.7 Control of the circulation pump 48
6.8 Boiler cleaning 48
6.9 Taking the boiler out of service 53
6.10 Operational checks and maintenance 53
6.11 Poor combustion, frequent operator errors 54
7 Troubleshooting 54
7.1 Boiler overheating 54
7.2 Power outage during operation 54
7.3 Operation of the boiler without electricity 55
7.4 Further troubleshooting 55
8 Further information 57
8.1 Properties of different types of fuels 57
8.2 Fuel consumption, refuelling frequency 57
8.3 Thermal loss of a building, methods of its determination 58
9 Safety Instructions 59
10 Disposal of transport packaging 60
11 Disposal of the boiler after the end of its lifespan 60
12 Related standards 60
13 Warranty conditions 61
14 WARNING! 62
15 Record of repairs performed 63

1 Advantages and applications of the boiler

1.1 Advantages of the boiler

Low investment costs

- The boiler contains a **patented integrated-mixing system,** which replaces the standard return water protection for the boiler (return line), and a mixing circuit with temperature regulation (e.g. of the Laddomat type) is not necessary.
- The boiler can be connected with a gravity circulation setup. This setup does not require a pump and an emergency cooling system.
- Excellent adjustability of output and long-term maintenance of a stable ember level allow achieving the same temperature and service comfort even with an accumulation tank of half the volume required for boilers without adjustability.

Low operating costs

- The automatic stable ember level function controls the shutdown of the boiler while maintaining a base layer of embers. Boiler efficiency and fuel consumption under defined operating conditions are specified in Table 3
- Electricity savings in a gravity circulation setup (without pump and electric mixing fittings).
- Cost savings on servicing and maintenance – progressive conceptual elements (e.g. split heat-resistant tiles made from high-quality ceramics) ensure low costs for the user on wear-and-tear parts.

Quality combustion

- The **patented radial nozzle** and **patented 3-zone air system** enable efficient combustion of dimensionally diverse fuels.
- The boiler has a unique design of the loading chamber with a compact insulating shell. Therefore, there is no excessive cooling of the fuel, and the combustion is of high quality even at low power and with fuels that have a higher moisture content.
- The regulator evaluates the instantaneous performance (from the temperature of the flue gases and water) and maintains it in the area of high-quality combustion.

Long lifespan

- During the gasification of wood, organic acids (acetic acid, etc.) are produced. In conventional boilers (made of steel sheets or cast iron), these acids condense on the walls of the loading chamber and cause chemical corrosion, which significantly shortens the lifespan. The compact insulating shell of the loading chamber completely eliminates this problem; the walls of the shell have a higher temperature, thus preventing condensation. The lifespan of boilers of this design is significantly higher than that of wood boilers without similar protection.
- The integrated water mixing system ensures that the temperature of the other heat exchange surfaces in contact with the flue gases is higher than the dew point of the flue gases (approximately 50 °C) during operation. This protects other internal surfaces of the boiler from low-temperature corrosion.

Service comfort

- **The patented detection of stable ember layer** accurately and reliably evaluates when the optimal layer of residual fuel is for switching to stable ember level shutdown. This ensures maximum time for refuelling without the need for fresh ignition. If it still goes out, an ideal layer of charcoal remains in the fireplace, which only needs to be ignited (e.g., with a piece of paper) and then fuel can be added. The necessity of regular lighting (i.e. removing ash from the loading chamber and lighting using shavings) is thus completely eliminated in operation.
- No need to remove ash from the bottom of the loading chamber. The ash continuously slides into the combustion chamber.
- Horizontal loading doors facilitate operation and allow for easy loading of loose fuels.
- Due to efficient combustion, it is usually sufficient to remove ash every 1 to 2 weeks of operation.
- Mechanical turbulators allow for easy and time-efficient cleaning of the heat exchanger using a lever.

- The exhaust fan prevents smoke from entering the boiler room during loading and ignition, and reduces dust when removing ash and cleaning the boiler.
- The insulating shell of the loading chamber ensures a higher wall temperature, preventing the accumulation of liquid tar on the walls.
- The sight window with ceramic glass allows the operator to easily monitor the burning condition and, using a simple regulator for the secondary air, to set the ideal combustion.
- The boiler can be operated in emergency mode even during a power outage using only the chimney draft (see chapter 7.3).

1.2 Use of the boiler

The BLAZE NATURAL PLUS gasification boilers are designed for heating family houses, residential units, cottages, office buildings, small businesses, and other premises. The BLAZE NATURAL PLUS boilers are officially approved (certified) for installations and operation without an accumulation tank (they meet the requirement of the EN 303-5 standard for adjustable output from 30 to 100%). The connection without an accumulation tank is only possible in an installation with corresponding heat consumption (see chapters 1.4 and 1.5).
If operated under installation conditions that do not comply with the requirements for connection and operation stated in this document, the warranty on the boiler is void.

The BLAZE NATURAL PLUS boilers are manufactured and tested according to the applicable documentation and comply with EN303-5+A1:2023 Heating boilers.

1.3 Advantages and disadvantages of operation without an accumulation tank

The advantages of a setup without an accumulation tank are cost savings (accumulation and expansion vessel, connection) and space savings.
The disadvantages are lower thermal comfort in the heated building (the internal temperature fluctuates) and greater demands on the operation of the boiler (the time of refuelling, size of the load, and adjustment of the output must be adapted to the requirements for heat consumption – the outdoor temperature).
Responsible assessment of whether it is possible to implement a setup without an accumulation tank is quite challenging. In addition to knowledge of the thermal parameters of the building, it also requires an assessment of the demands for thermal comfort and control options, see chapters 1.4 and 1.5.
Installation without an accumulation tank is always riskier than with an accumulation tank and thus places greater demands on the experience and professionalism of the seller.

1.4 Conditions for operating a boiler without an accumulation tank

Operation of the BLAZE NATURAL PLUS boiler without an accumulation tank is only possible in an installation where:

1. **The condition for minimum consumption has been met: Consumption of the nominal output of the boiler is always ensured for at least 1.5 hours or 50% output for 3 hours** (corresponds to the consumption of the boiler output at half the usual fuel load).
   The following condition can be met:
   A. The boiler is the only source of heat in the building with an appropriate thermal capacity, whose heat loss is equal to or greater than **minimum value** defined in table 1 on page 8.
   B. The boiler is connected to another heat source (heat pump, gas boiler, another wood boiler, etc.) and the regulation of output is managed by switching off individual heat sources, or possibly by the simultaneous operation of both.
   C. The boiler heats the building with a special heating mode featuring intermittent heating, for example, workshops with shift operations, etc.
   D. The boiler is in an installation where there is sufficient heat consumption capacity, e.g. heating of process water, pool heating, greenhouse heating, etc.

2. **Users of the heated building tolerate a lower temperature comfort in the heated building (temperature fluctuations).**

3. **The operator is qualified to refuel at the right time and in the right amount according to the needs of the building and the boiler.**

If the seller is not sufficiently confident that the aforementioned conditions are met, it is necessary to install an accumulation tank.
The reasons that there is no place to put the accumulation tank, or that the customer cannot afford it, are not sufficient. If the seller determines that the tank is necessary and the customer still refuses the tank, the customer must assume the risks themselves. The seller and the manufacturer cannot bear these risks. In such case, it is better to decline the order. If there is an effort, an acceptable place for the tank can be found in the building (it can be distant from the boiler – garage, attic, cellar, shed, an unused corner in the living space, etc.)

1.5 General conditions for connection and operation (with and without an accumulation tank)

The operation of the BLAZE NATURAL PLUS boiler is only possible in installations where (points 4-8):

4. **The condition for maximum consumption has been met: The heat loss from the boiler-heated part of the building must not exceed the maximum value defined in table 1, so that during in very cold periods** (average daily temperature below -5 °C …approximately 20 days a year) **it is sufficient to refuel 4 times a day.**
5. **The boiler is correctly installed (hydraulic connection, flue gases removal, electrical installation, etc.).**
6. **The fuel is suitable (e.g. logs of the correct length, appropriately split, dry).**
7. **The boiler is used correctly (ignition, refuelling, setting, ash removal and cleaning, checks).**
8. **The boiler and related equipment (flue gas system, heating system, etc.) are functional.**

Table 1: **Minimum heat loss** of a building where the BLAZE NATURAL PLUS boiler can be used without an accumulation tank; and **maximum heat loss** of the building where BLAZE NATURAL PLUS is the only heating source

Minimum* and **maximum** thermal loss of a building where the BN PLUS 17 boiler can be used as the only heating source	light structure hollow brick autoclaved aerated concrete wood, Ytong	usual structure full masonry 40cm solid block 40-50 cm	medium-heavy structure full masonry brick, stone 40-60 cm	heavy structure full masonry brick stone 60cm and more
briquettes	**ACCU necessary**	**8 – 14**	**6 – 14**	**5 – 14**
hardwood (beech, hornbeam, acacia, ...)**	**ACCU necessary**	**8 – 12**	**6 – 12**	**5 – 12**
medium (birch, mix)**	**ACCU necessary**	**8 – 10**	**6 – 10**	**5 – 10**
softwood (spruce, poplar, …)**	**ACCU necessary**	**8 – 8**	**6 – 8**	**5 – 8**

Minimum* and **maximum** thermal loss of a building where the BN PLUS 25 can be used as the only heating source	light structure autoclaved aerated concrete wood, Ytong	usual structure full masonry 25-40cm solid block 40-50 cm	medium-heavy structure full masonry brick, stone 40-60 cm	heavy structure full masonry brick stone 60cm and more
briquettes	**ACCU necessary**	**14 – 24**	**10 – 24**	**8 – 24**
hardwood (beech, hornbeam, acacia, ...)**	**ACCU necessary**	**14 – 20**	**10 – 20**	**8 – 20**
medium (birch, mix)**	**ACCU necessary**	**14– 17**	**10 – 17**	**8 – 17**
softwood (spruce, poplar, …)**	**ACCU necessary**	**14 - 14**	**10 – 14**	**8 – 14**

Minimum* and **maximum** thermal loss of a building where the BN PLUS 40 boiler can be used as the only heating source	light structure autoclaved aerated concrete wood, Ytong	usual structure full masonry 25-40cm solid block 40-50 cm	medium-heavy structure full masonry brick, stone 40-60 cm	heavy structure full masonry brick stone 60cm and more
briquettes	**ACCU necessary**	**21 – 36**	**15 – 36**	**12 – 36**
hardwood (beech, hornbeam, acacia, ...)**	**ACCU necessary**	**21 – 30**	**15 – 30**	**12 – 30**
medium (birch, mix)**	**ACCU necessary**	**21 – 25**	**15 – 25**	**12 – 25**
softwood (spruce, poplar, …)**	**ACCU necessary**	**21 – 21**	**15 – 21**	**12 – 21**

*** In large-scale systems, it is possible to include the accumulation capacity of the system: Every 200l of water volume in the system reduces the minimum heat loss value by 1kW (if there is a combined boiler in the radiator circuit, its volume is counted as one third).**

** Applies to standard firewood, i.e., mostly standard regular logs that are smoothly delimbed, with lengths of 25, 33, and 50 cm (depending on the type of boiler). Irregular bulk wood (various lengths, curved, logs with pronounced protrusions from branches, offcuts from wood production, etc.) has poorer filling and therefore it is necessary to refuel 1.2x - 1.5x more often. In the case of irregular bulk wood, the maximum heat loss for the given boiler **(in red)** must be divided by a value of 1.2–1.5 (so that it is not necessary to refuel more than 4 times a day).

2 Technical data of the boiler

Table 2. Dimensions and technical parameters of the boiler

Boiler type		BN PLUS 17	BN PLUS 25	BN PLUS 40
Weight	kg	245	330	440
Water capacity	dm^3	32	40	55
Flue pipe diameter	mm	150	150	150
Volume of the loading chamber	dm^3	40	80	120
Boiler dimensions: width x depth x height	mm	450x955x1200	530x958 x1200	714x958x1200
Dimension of the loading opening	mm	276x276	356 x 356	540 x 356
Maximum fuel length	mm	250	330	500
Maximum allowable operating pressure	bar	3.0		
Test pressure for type testing	bar	6.0		
Temperature control range of the outlet water	°C	70–95		
Maximum allowable operating temperature	°C	95		
Hydraulic loss of the boiler at Δ T = 20 K	mbar	2.4	1.9	6.4
Maximum noise level	dB	55		
Minimum operating draft of the chimney [1]	mbar	0.05		
	Pa	5		
Boiler connections: - heating water	Js	G 6/4"		
- return water	Js	G 6/4"		
Connection voltage		1 PEN ~ 230V / 0.5A / 50 Hz		
Environment		basic AA5 / AB5		
Ingress protection		IP 20		
Energy efficiency class		A+		

Table 3. Thermal technical parameters of the boiler

Boiler type		BN PLUS 17	BN PLUS 25	BN PLUS 40
Nominal output	kW	17	26	40
Minimum output	kW	5	7.6	12
Output controllability through continuous operation	kW	5 – 17	7.6 – 26	12–40
Fuel consumption at nominal output	$kg \cdot h^{-1}$	4.1	6.4	9.6
Full fuel load burning time				
- at nominal output during certification	h	2.5	4	3
- during normal operation of the boiler	h	2.5 - 6	4 - 6	3 - 6
Boiler class according to EN 303-5		5		
Eco-design		Yes		
Flue gas temperature [2]				
- at nominal output	°C	140	150	160
- at minimum output (30%)	°C	110	110	110
Efficiency	%			
- at nominal output		90.1	89.5	90.0
- at minimum output (30%)	%	91.2	90.5	91.0
Minimum return water temperature without an integrated thermostat	°C	50	50	50
Minimum return water temperature with an integrated thermostat	°C	20	20	20
Mass flow of flue gases at the outlet at nominal output	$kg \cdot s^{-1}$	0.012	0.017	0.024
Mass flow of flue gases at the outlet at minimum output	$kg \cdot s^{-1}$	0.004	0.006	0.008
Maximum power consumption	W	150	150	150
Power consumption at nominal output	W	20	29	33
Power consumption at minimum output	W	17	14	14
Power consumption in standby mode	W	3	3	3
Required accumulation tank volume [3]	l	0 - 1000	0 - 2000	0 - 3000
Boiler operating mode		Non-condensing		
Boiler category		1		

[1] The requirements for the chimney are described in chapter 5.8
[2] Applies to the clean heat exchanger (with typical fouling, the flue gas temperature is higher by approximately 10 to 20 °C)
[3] The boiler meets the requirements for controllability according to EN 303-5 for a setup without an accumulation tank

3 Prescribed fuel

The warranty fuel for the BLAZE NATURAL PLUS boiler is the fuel listed in the table below. This is the fuel used during the boiler certification.

Table 4. Warranty fuel for the BLAZE NATURAL PLUS boiler

Boiler		**BN PLUS 17**	**BN PLUS 25**	**BN PLUS 40**
Type of fuel		Wood		
Diameter	[mm]	max. 150		
Length	[mm]	max. 250	max. 330	max. 500
Water content	[%]	max. 20		
Content of ash	[%]	max. 1.5		
Calorific value	[$MJ.kg^{-1}$]	min. 14		

The fuel must comply with the requirements of the EN ISO 17225-5 (wood) standards.

For more useful information about fuel, see chapter 8.

4 Boiler description

4.1 Boiler design

The boiler design meets the requirements of:
EN 303-5+A1: 2023 – Heating boilers – Part 5: Heating boilers for solid fuels, manually and automatically stoked, nominal heat output of up to 500 kW – Terminology, requirements, testing and marking.

BLAZE NATURAL PLUS is a gasification boiler, whose main components are: upper gasification (loading) chamber (1), lower combustion chamber (2), and heat exchanger (3,4). The loading chamber and the combustion chamber are connected by a nozzle (20).

The body of the boiler is welded from steel sheets with a thickness of 3 to 8 mm. The walls of the loading chamber (1) are fitted with a steel protective shell (5) made of several segments, interconnected by locking joints. The bottom of the loading chamber is funnel-shaped and is lined with ceramic tiles (21, 35, 45). The nozzles (20) consist of radially arranged slots at the bottom of the loading chamber, which continue into sloped channels leading to the manifold (40) that opens into the combustion chamber. There are secondary air inlets leading to the nozzle (20).

The combustion chamber (2) is lined with ceramic tiles (27) in the case of BN25 and BN40 models, while the BN17 model features a central labyrinth (59,60,61). The bottom of the combustion chamber is lined with ceramic tiles (62), insulated with a double-layer insulation with a total thickness of 55 mm.

The heat exchange surfaces of the boiler are formed by the side walls of the combustion chamber (3) and the rear tube heat exchanger (4) with movable turbulators (31).
The boiler is equipped with 30 mm thick mineral wool insulation. The outer surface is made up of steel sheet covers. The lower boiler door contains a sight glass (19) with ceramic tiles.

On front wall of the boiler is a regulator (17) for controlling the exhaust fan output according to the flue gases temperature. The regulator includes an emergency thermostat (STB). At the front of the boiler, under the front cover, there is an air distribution panel (30). In its lower part, there are 3 intake openings for combustion air: primary air (50), secondary air (52), and pre-drying air (51). Each of the openings is fitted with a valve (18) on the internal side. The openings (50, 51, 52) on the outer side are equipped with a sliding shutter for manual control of the ratio of secondary air, primary air, and pre-drying air (8).
In the loading chamber (1), there is a detection arm (12) for the stable ember level function with an axis of rotation in the front wall of the loading chamber. The detection arm (12) is rigidly connected to a balancing arm located in the air

distribution panel area (30). Under the balancing arm (44) is the stable ember layer sensor (36). The detection arm lock (32) is a mechanism consisting of a pressure strut with a spring. The detection arm presses down when the loading door is opened, so as not to obstruct the loading of fuel.
The water inlet coupling (15) opens into the internal distributor (38), from where water enters the boiler's water space through a number of small openings. The water temperature control thermostat in the boiler (33) is located at the inlet coupling (15).
The boiler is supplied with the bottom door mounted on the left side (hinges on the left side). The door can be subsequently reinstalled to the right side as needed.
The exhaust fan (7) can be rotated so that the flue gases (14) discharge in the desired direction.
The boiler is equipped with a cooling circuit for emergency cooling, featuring an inlet coupling (39) and an outlet coupling (37) with internal threads of 1/2" and a socket (42) for the sensor of the emergency cooling fitting.
The upper (loading) door is equipped with a safety lock (26) to secure any opening position.

4.2 Function description

Refuelling is usually done when the boiler is shut down (the exhaust fan is not operating). Switch on the exhaust fan using the button (55). By opening the loading door, the detection arm (12) is tilted via the pressing mechanism (32) to not hinder the loading of fuel.

Assess the layer of cinder left from the previous fuel batch. If this residual layer is still hot, simply add fuel to the loading chamber. If the residual layer is already extinct, it serves as ignition fuel. Before adding fuel, throw a lit paper onto it, for example.

After attaching and closing the door, the exhaust fan creates a vacuum that draws air for combustion into the boiler.
Pre-drying air enters the air distribution panel (30) through the opening on the left (51), rises through the channel in the air distribution panel, passes through the opening in the upper part of the boiler body, and is fed above the fuel layer through the longitudinal opening (43). Its effect accelerates the drying and heating of the new layer of fuel.
Secondary air enters the air distribution panel (30) through the right opening (52), from where it flows through a circular opening in the boiler body to the bottom of the loading chamber, where it is supplied through a series of openings to the channels on the underside of the tiles (21), where it is pre-heated and exits into the flow of gases in the mixing duct (40) of the nozzle (20).
Primary air enters the air distribution panel (30) through the opening in the middle (50), from there it flows behind the shell of the loading chamber (5) and then exits into the lower layer of fuel. Its effect leads to the primary combustion of fuel (gasification). The emerging wood gas flows through the nozzle (20) into the mixer (40), where it mixes with secondary air. There is combustion of gaseous components (secondary combustion) in the combustion chamber (2). Hot flue gases flow through the rear tiles (27) into the heat exchanger, where they transfer their heat to the heated water. The exhaust fan (7) draws in the flue gases and pushes them through the neck (14) into the chimney.

The ash settles into the combustion chamber (2), from where it can be removed.

In OPERATION mode, the regulator controls the speed of the exhaust fan so that the boiler output matches the value selected by the output control knob (54). The current value of the boiler output is determined by the temperature of the flue gases and the temperature of the output water from the boiler. The regulator has a range of 30-100% output. If the output taken from the boiler is less than 30% and the water temperature from the boiler exceeds 95 °C (service parameter – can be reset by a service technician), the regulator will stop the exhaust fan. This will close the air supply – the boiler will switch to PAUSE mode.
If the water temperature exceeds 98 °C, the exhaust fan (7) and the emergency thermostat (STB) will shut down.

After the fuel has burned down to the base layer, the detection arm (12) will stop pressing and will tilt upwards towards the loading chamber. At the same time, its internal balancing part tilts downwards and activates the sensor (36), which turns off the exhaust fan (7) via the regulator. The boiler then switches to stable ember level shutdown. Depending on the chimney draft, the type of fuel used, etc., the base layer will maintain heat for up to 8 hours.
The thermostat (33) restricts the flow of water to the internal water distributor so that the temperature of the heat exchange surfaces is above 60 °C.

4.3 Boiler dimensions

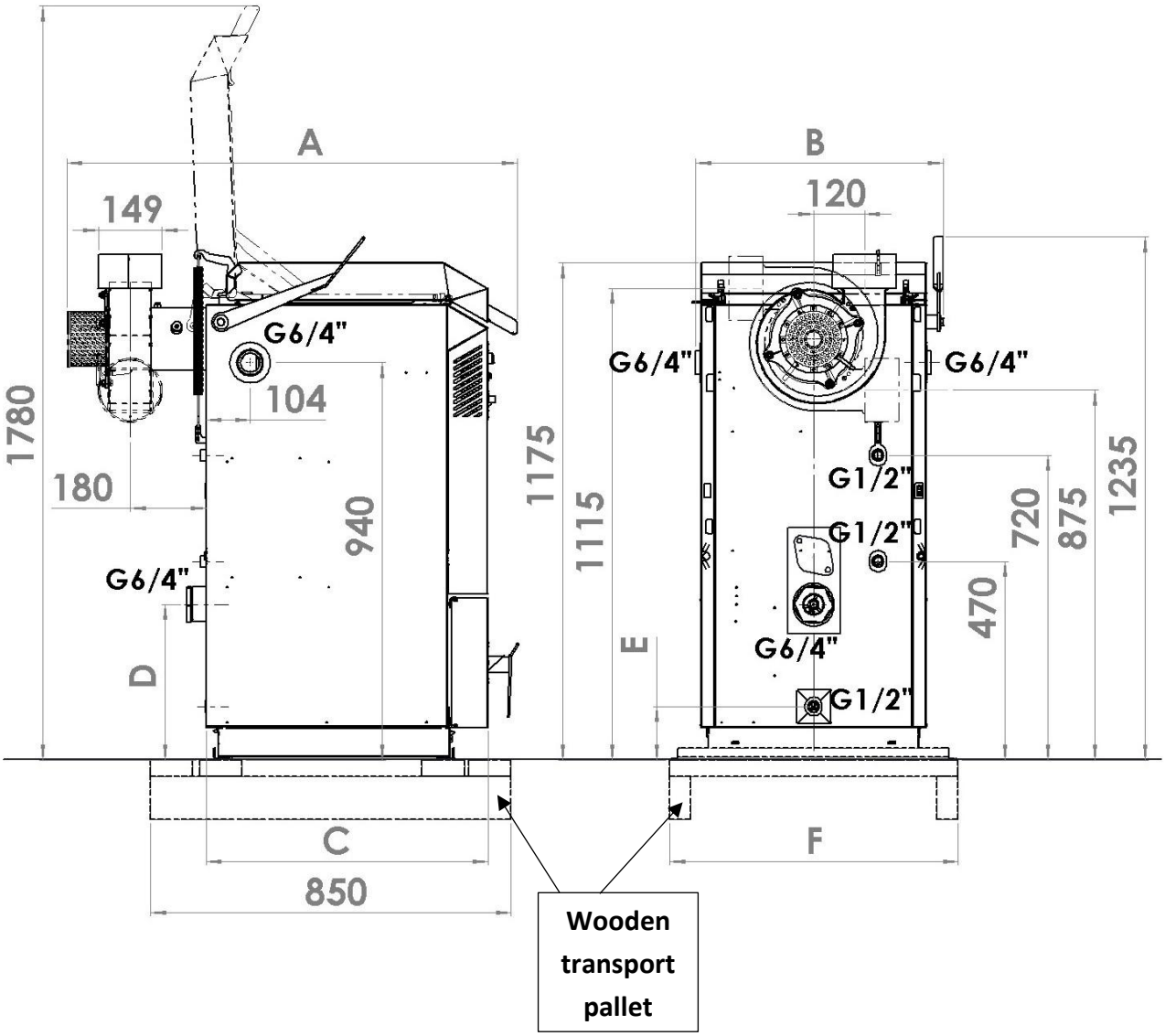

Table 5. Table of basic dimensions of the BLAZE NATURAL PLUS boiler

	BN PLUS 17	BN PLUS 25	BN PLUS 40
A [mm]	960	1040	1040
B [mm]	504	584	768
C [mm]	584	664	664
D [mm]	280	370	370
E [mm]	100	130	130
F [mm]	680	680	870

Boiler schematic – front view

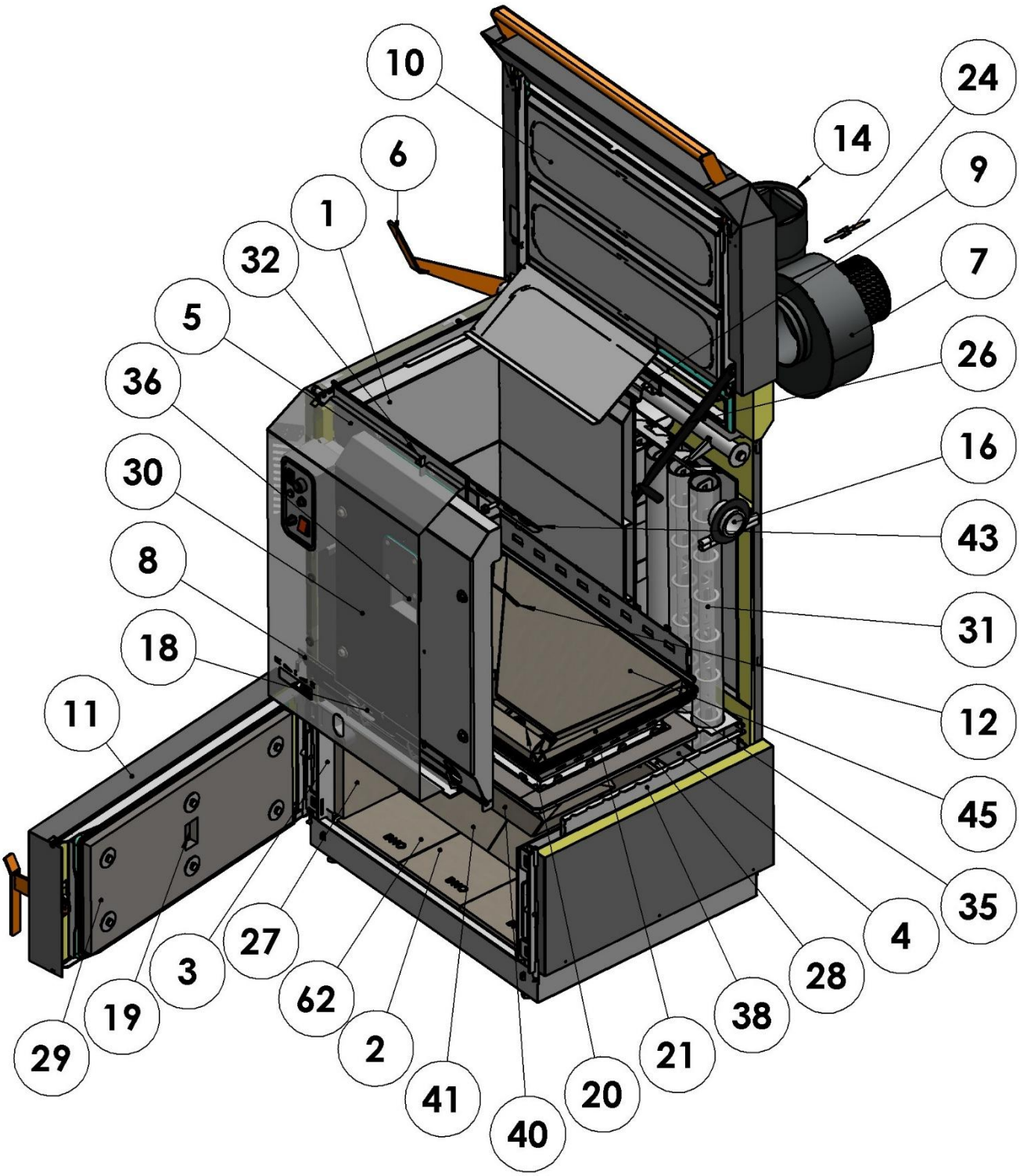

Rear view of the BLAZE NATURAL PLUS 25 and 40 with dimensions

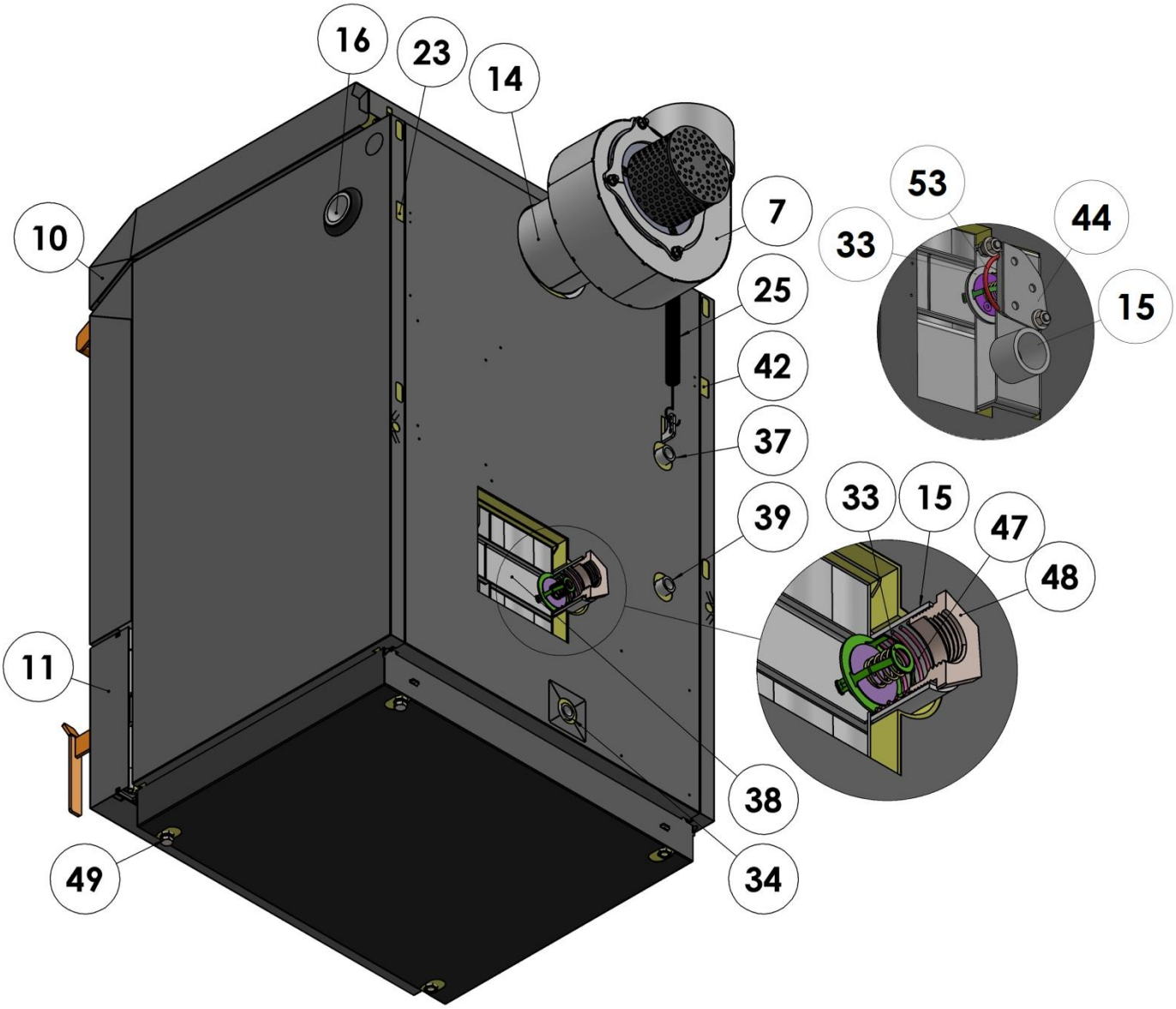

Boiler schematic – rear view

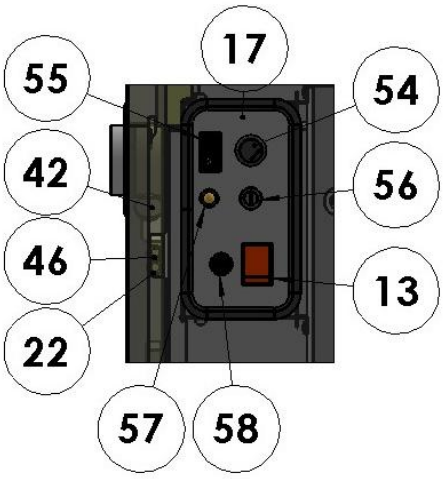

Boiler regulator – control elements

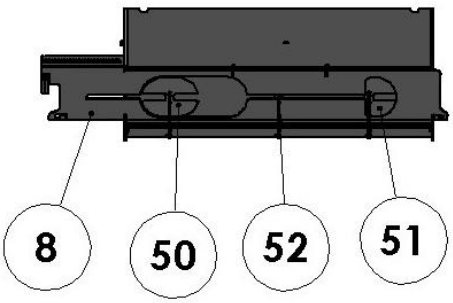

Boiler schematic – air supply detail

BLAZE NATURAL PLUS 17

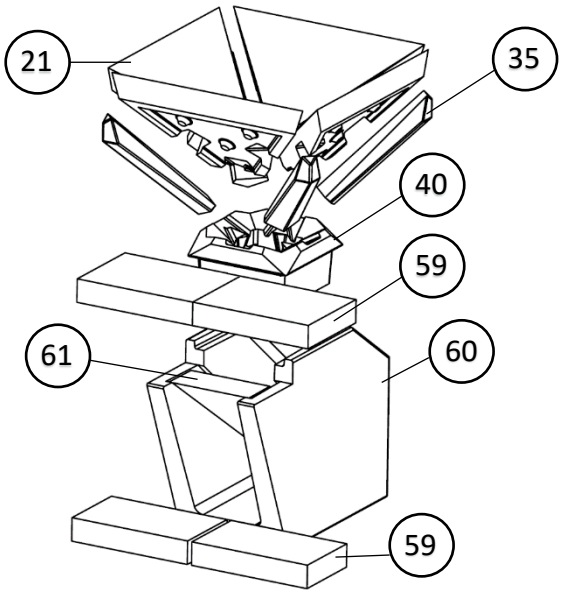

BLAZE NATURAL PLUS 25

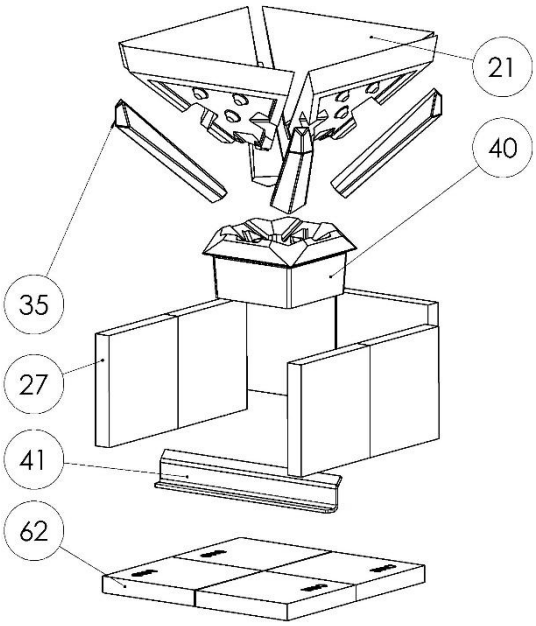

BLAZE NATURAL PLUS 40

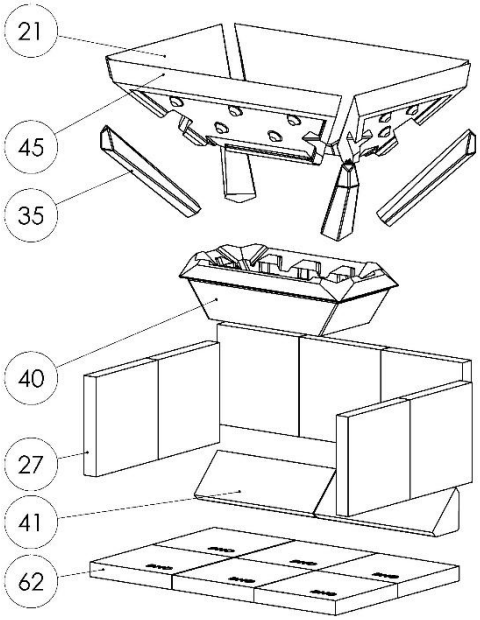

Arrangement of tiles by boiler type

Legend

1. Loading (gasification) chamber
2. Combustion chamber
3. Flue gas exchanger, side
4. Flue gas exchanger, rear
5. Shell of the loading chamber
6. Lever of mechanical turbulators
7. Flue gases fan
8. Air ratio shutter
9. Heat exchanger plug, upper
10. Upper door
11. Lower door
12. Detection arm of stable ember layer
13. Main switch
14. Flue gas outlet
15. Inlet coupling G $^{6}/_{4}$" [1]
or G 2 ½“ [2] [3]
16. Outlet coupling G $^{6}/_{4}$" (internal)
17. Regulator control panel
18. Air valve
19. Sight window with ceramic glass
20. Nozzle (duct connecting the loading chamber and combustion chamber)
21. Diagonal tile (4x [1], 4x [2], 2x [3])
22. Emergency thermostat
24. Flue gas temperature sensor
25. Auxiliary spring for the upper door
26. Upper door locking strut
27. Tile of the combustion chamber (6x [2], 7x [3])
28. Rear tiles bar [2] [3]
29. Heat insulation of the lower door
30. Air distribution panel
31. Turbulators (4x [1], 6x [2], 9x[3])
32. Pressure mechanism rod of the detection arm (for loading)
33. Thermostat of integrated mixing
34. Outlet and inlet coupling 1/2"
35. Corner tile (4x)
36. Stable ember level function (touchless-inductive switch)
37. Cooling water outlet
38. Internal water distributor
39. Cooling water intlet
40. Mixer tile
41. Heat exchanger plug (1x [2], 2x [3])
42. Well for the cooling fitting sensor
43. Pre-drying air outlet
44. Thermostat cap [1]
45. Long tile (2x [2])
46. Well for the boiler pump switching sensor
47. Thermostat pressure spring
48. Reducer 2 ½" to 6/4"
49. Base screws of the boiler
50. Primary air inlet
51. Pre-drying air inlet
52. Secondary air inlet
53. O-ring of the thermostat cap [1]
54. Output control knob
55. Loading button (full fan power)
56. Regulator fuse
57. Fuel (burnout) indicator
58. Emergency thermostat button
59. Tile – slab (4x [1])
60. Tile – labyrinth (1x [1])
61. Tile – partition (1x [1])
62. Tile of the combustion chamber - bottom (4x [2], 6x [3])

[1] Only for the BLAZE NATURAL PLUS 17 boiler
[2] Only for the BLAZE NATURAL PLUS 25 boiler
[3] Only for the BLAZE NATURAL PLUS 40 boiler

4.4 Detail and description of the control and signalling elements of the boiler regulator

LOADING BUTTON
If the boiler is in STOP:
Short press – The fuel indicator will turn off, the fan will run at maximum for 1 minute, then it will switch to OPERATION mode with the standby function (after completion, it will switch to STOP and the boiler will retain a basic ember layer).
Long press (3s) – The fuel indicator will start flashing, the fan will run at maximum for 1 minute, then it will switch to OPERATION mode without the standby function (after burning out, it will switch to STOP and the boiler will completely extinguish).
If the boiler is in OPERATION:
Short press - the fuel light comes on. The fan switches off. Boiler goes into STOP.

BOILER OUTPUT SETTING
Based on the set value of 30–100%, the regulator controls the speed of the exhaust fan and thus the output of the boiler to match the desired value. Recommended value 40–70%.

OPERATION INDICATOR
On – OPERATION mode
Flashing – Overheated – PAUSE (after the water temperature drops it goes back to OPERATION)
Flashing 2x – Water temperature sensor fault.
Flashing 3x – Combustion temperature sensor fault
Flashing 4x – Regulator fault... see chapter 7 Troubleshooting.

FUEL INDICATOR
On – STOP mode fuel has burned out (according to the setting completely, or to the stable ember level).
Flashing – OPERATION mode without the stable ember level function.
Off – OPERATION mode with the stable ember level function.

FUSE 1A
Current protection of the regulator.

EMERGENCY THERMOSTAT (STB) RESET
In the event of the boiler overheating above 98 °C, the emergency thermostat disconnects the power supply to the exhaust fan. To restore the operation of the exhaust fan, wait for the water temperature in the boiler to drop (to about 70 °C), and after unscrewing the cover, press the emergency thermostat button.

MAIN SWITCH
Disconnects the power of the regulator with electrical current – the exhaust fan does not operate and the pump's operational switching does not function (regardless of the position of the main switch, the pump will activate when the emergency thermostat (STB) is triggered).
By toggling again, you will switch from OPERATION to STOP.
If the main switch is in position I and does not light up, the emergency thermostat (STB) is disconnected, or the power supply to the boiler is disconnected.

5 Boiler assembly and installation

During installation and operation of the boiler, all local rules and regulations relating to national and European standards must be observed. Assembly and installation may only be carried out by an authorised person.

5.1 Checking the quality and completeness

a) Check for any hidden damage that may have occurred during transport, even if the boiler packaging was not damaged. If you find any damage, please promptly send information along with photographic documentation to the e-mail:info@blazeharmony.com

b) Check the contents of the boiler packaging. The BLAZE NATURAL PLUS boiler includes a complete boiler body with a regulator and a reduction from 2 1/2" to 6/4", an exhaust fan, a tool set (4 pcs), a thermostat for integrated mixing + thermostat spring, an operating and installation manual for the boiler, and a warranty certificate.

5.2 Removing parts of the boiler before relocation to the boiler room

The boiler is delivered on a wooden shipping pallet, which allows for handling with a pallet truck. The boiler is attached to the pallet with two steel cross strips using 4 M12 screws. After placing it in the boiler room, dismantle the pallet and reattach the base screws (these are used to set the boiler in a horizontal position). To reduce the weight of the boiler, you can remove some of its parts according to the following procedure:

a) Removal of ceramic tiles from the combustion chamber
- Pull the side tiles towards you.
- Flip the rear tiles towards you and remove the stainless steel strip. Then remove the rear tiles.
- Remove the tiles from the bottom last.

(Arrangement of ceramic tiles in the combustion chamber – see chapter 4.3.)

b) Removal of ceramic tiles from the loading chamber
- Remove the tiles from the loading chamber.

(Arrangement of ceramic tiles in the loading chamber – see chapter 4.3.)

c) Removing boiler covers
- It is necessary to remove the regulator and any cables entering under the boiler cover.
- We do not recommend removing the bottom cover. When not using a transport pallet, it may be damaged and it will not be possible to reinstall the covers.

The regulator is located on the front wall of the boiler, attached to the air distribution panel.

d) Removal of the lower door
- Before removing the lower door, first remove the front cover.
- Open the door and pull it upwards to release it from the hinge.

<u>When assembling the boiler, proceed in the reverse order of disassembly. Caution! Do not confuse the combustion chamber tiles – bottom (section 4.3., position 62) with the side/rear combustion chamber tiles (section 4.3., position 27).</u>

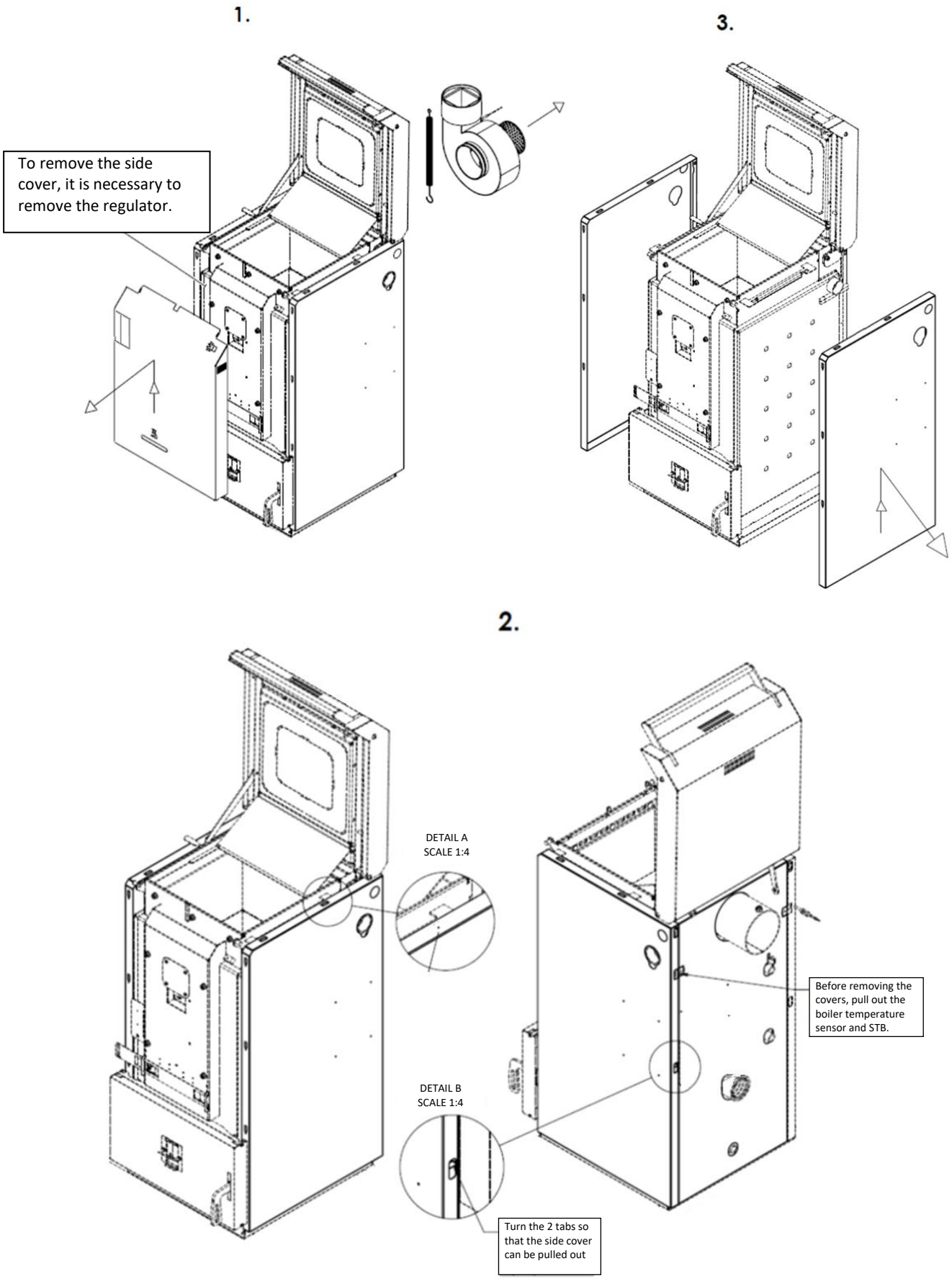

5.3 Disassembly of the transport pallet

Procedure for disassembling the transport pallet:

- Remove the cross protective boards (front and back wall of the boiler).
- Unscrew the screws of the cross steel strips (on the side wall of the boiler).
- Tilt the boiler to the side and pull out the longitudinal beam on the opposite side. Do the same on the opposite side.
- Tilt the boiler slightly backwards and pull out the front cross support board. Do the same on the opposite side.
- Loosen the 4 M12 screws (spanner no. 19) between the floor and the cross strips. There is no need to lift the boiler when loosening. Screws only need to be loosened by a full turn.
- Lean the boiler slightly backwards and move the front strip to the side by approximately 20 mm. This will release the screw from the head and it will fall down. Do the same on the opposite side.
- Using the 4 M12 screws, install the boiler in a stable horizontal position.

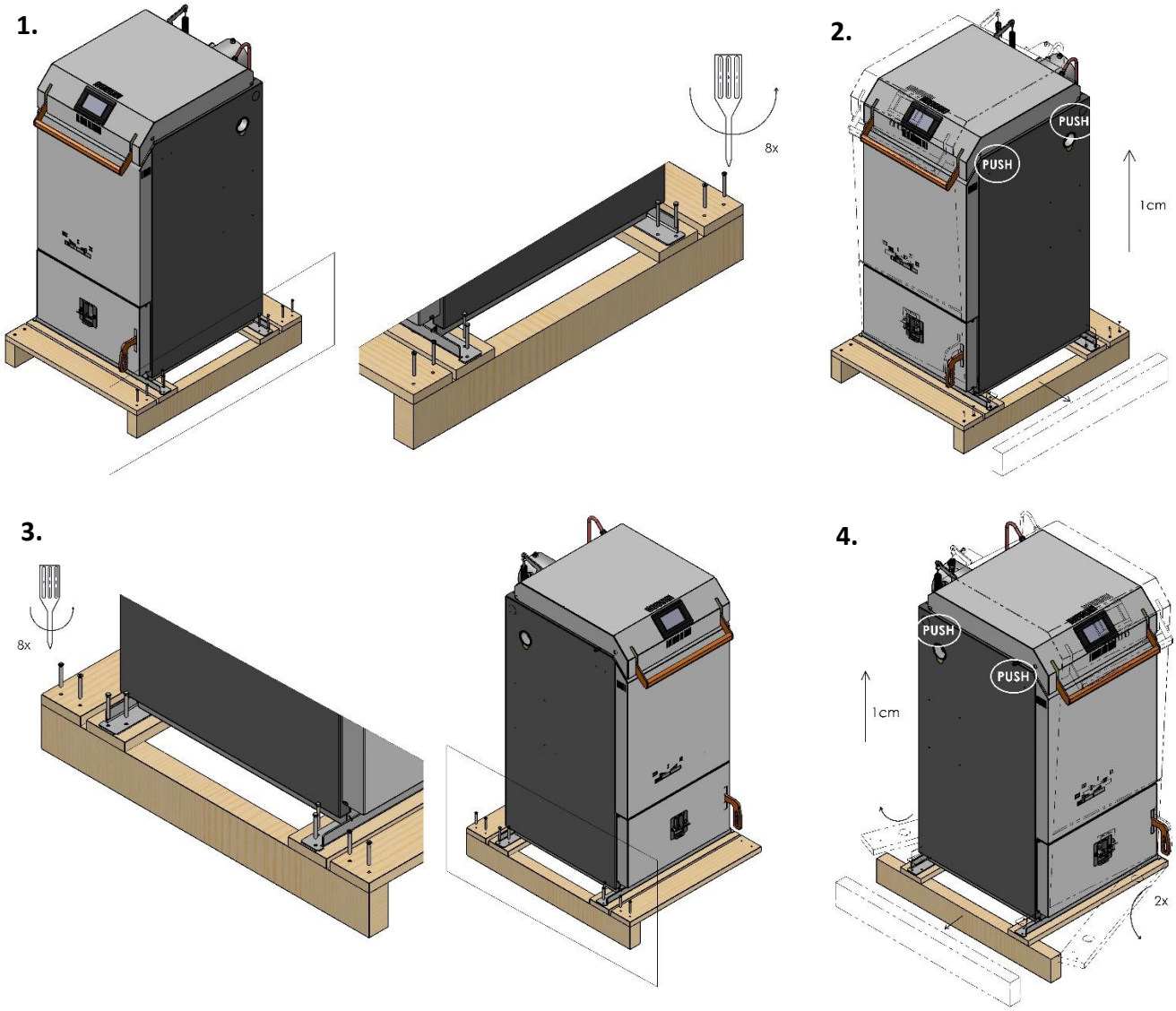

5.

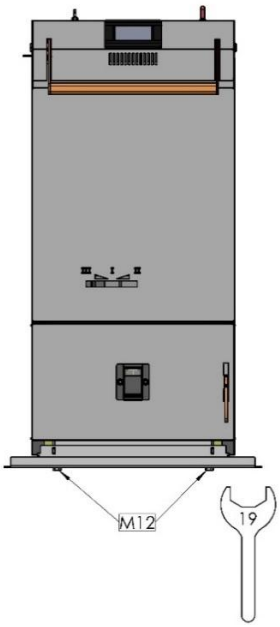

6.

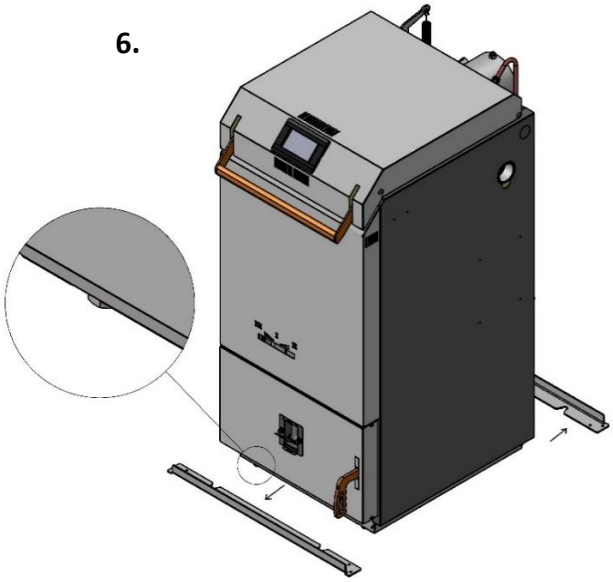

5.4 Handling the boiler

When handling the boiler during transport to the boiler room, we recommend using the 6/4" outlet couplings on the side walls of the body, into which common steel pipes with external thread G 6/4" are screwed (to a depth of at least 40 mm) – see picture below.
Another suitable element when handling the boiler is the flue gas outlet – see the image below on the left.

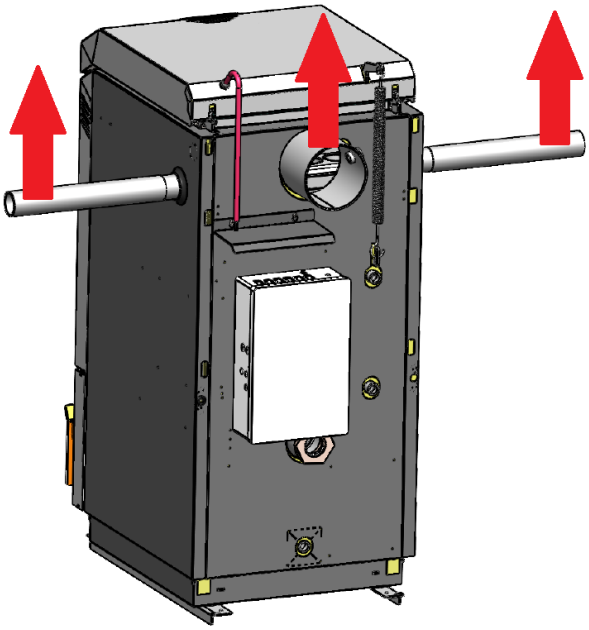

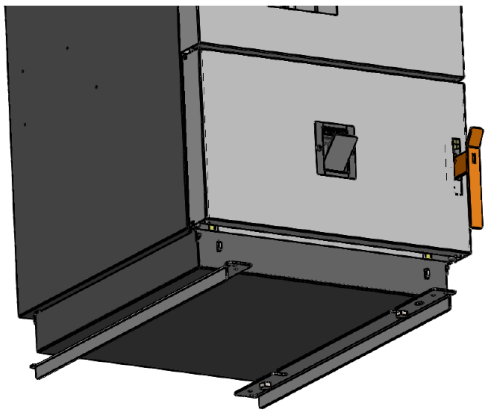

To move the boiler across the floor, you can also use the transport strips that were used to secure the boiler to the pallet. By installing them on the boiler in the inverted position – see the image above right – sliding strips are created, which facilitate the movement of the boiler across a horizontal floor, for example, using rollers.

This method of handling the boiler is only possible in cases where there is no risk of damage to the floor (or where damage does not matter).

Any other method of handling the boiler (by the door, shell, regulator, etc.) poses a risk of damage to the boiler.

5.5 Placing the boiler in the boiler room

There must be a sufficient free space around the boiler (see the image below) for operation, maintenance, or potential servicing.
The boiler must be placed on a non-combustible, heat-insulating base, extending beyond its footprint at the front by at least 300 mm and on the other sides by at least 100 mm.
The minimum permissible distances of the outer contours of the boiler from combustible materials (see EN 13501-1) must be at least 400 mm. Flammable materials must not be placed in front of the appliance and within a distance less than the safe distance from it.
If there is no suitable space in the heated building, heating can be provided from a nearby building (garage, barn, workshop), where the boiler and usually the tank are placed. Ground pre-insulated pipes can be used to connect buildings.

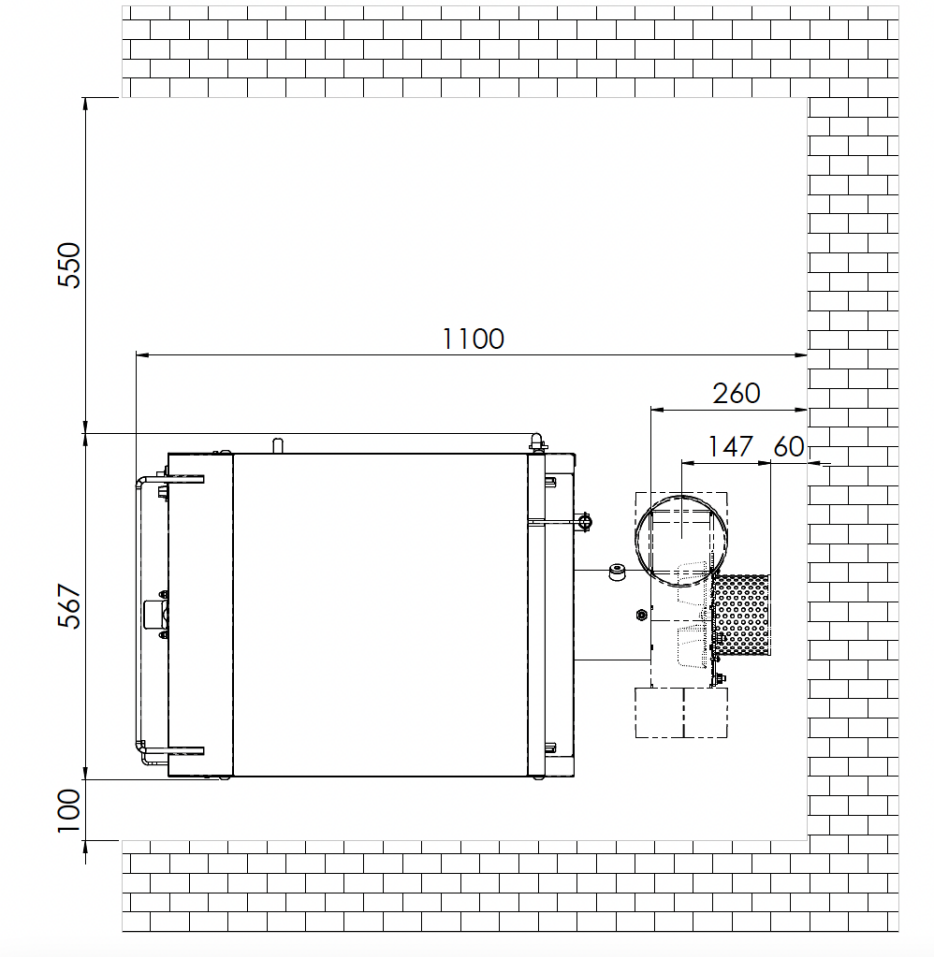

Minimum dimensions for boiler placement

5.6 Switching the lower door

If the serially supplied arrangement of the lower door (hinge on the left, handle on the right) is unsuitable, it is possible to reconfigure this arrangement using the following procedure:

- Open the loading door.
- Lift the boiler door, i.e., raise the door upwards, gently tilt it (release the upper hinge) and by sliding it back down, release the lower hinge.
- Remove the sight glass (A) from the door, rotate it 180°, and reinstall it into the door.
- Loosen the nut (B), remove the handle from the door, rotate it 180° and reassemble it in the reverse order. If necessary, the cover of the door can be released by turning the tab and freeing it from the stop (C).
- Rotate the modified door by 180° and fit it onto the hinges on the opposite (right) side.
- Finally, close the loading door properly.

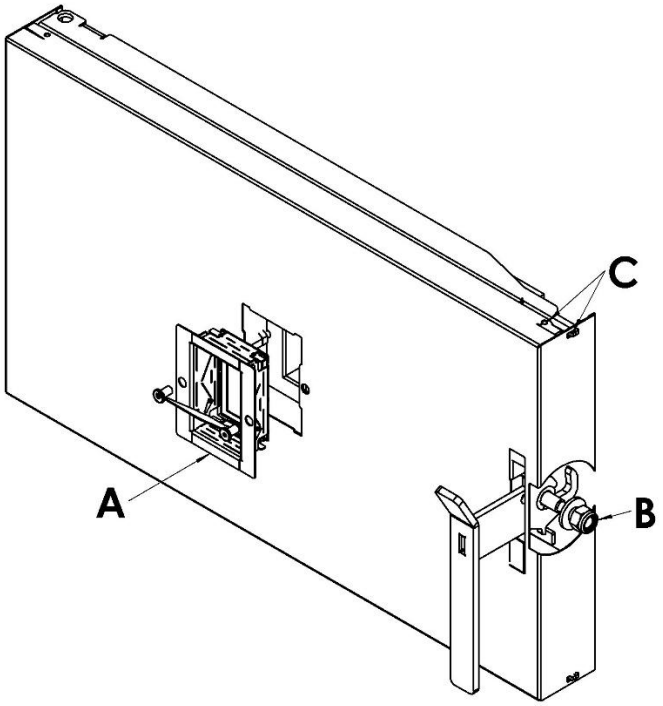

5.7 Installation of the exhaust fan

The exhaust fan is supplied detached, and for transport, it is stored in the loading chamber of the boiler.

- Loosen the hex socket screw on the flue pipe of the boiler.
- Attach the exhaust fan and select the desired position for the installation – see image on p. 12. Then secure with a screw with the hex socket screw.
- Connect the cable of the exhaust fan (5-pin connector) to the regulator DR01.
- Place the flue gas sensor into the opening of the exhaust fan and secure it with a screw. Connect it electrically to the regulator DR01.

5.8 Connection to the chimney

For the proper commissioning of the boiler into permanent operation, a chimney inspection is required, which is only valid if it consists of the following parts: inspection report, technical report, and calculation of the flue gas path. Whether the existing chimney is suitable for the type of boiler used needs to be verified by a calculation from a chimney sweeper before the installation of the boiler.

As the boiler is equipped with an exhaust fan, the requirements for the chimney draft are minimal. The flue cross-section must be large enough for the chimney to be able to discharge a greater amount of flue gases during loading and ignition. When the door is open, the boiler produces approximately double the amount of flue gases compared to operation at nominal output.

Table 6. Diameters of the chimney flue of the BLAZE NATURAL PLUS boilers

Boiler		**BN PLUS 17**	**BN PLUS 25**	**BN PLUS 40**
Recommended diameter of the chimney flue	[mm]	160	160	180
Minimum diameter of the chimney flue	[mm]	150	150	150

We do not recommend a chimney draft regulator for standard chimneys (with operating drafts of 10 to 30 Pa). They are a source of leaks and transfer heat from the heated building to the chimney.
The flue pipe must be securely assembled and secured to prevent any accidental or spontaneous release of its parts. A flue longer than 2 m must be securely anchored. All components of the flue pipe must be made of non-combustible materials.
We recommend sealing the gaps in the flue pipe with a sealant designed for this purpose or by using aluminium tape. The chimney door must also be tight. Sealing can be achieved by an additional cover with a rubber sleeve secured, for example, with screws.
We recommend that the chimney flue is sufficiently thermally insulated.
For flue pipes longer than 1 metre, we recommend fitting suitable insulation, for example, made of mineral wool with an outer aluminium foil. In an uninsulated flue pipe, there is intense cooling of the flue gases. During operation at low output, there is a risk of condensation of moisture from the flue gases.
The minimum permissible flue gas temperature 1 m below the upper edge (outlet) of the chimney is 90 ^{o}C.
The ideal situation is a chimney located within the building, as outdoor chimneys experience greater cooling.

5.9 Supplying air to the boiler

The air needed for combustion can be supplied to the boiler room directly from the external environment or from the living space. Air supply from the living space is advantageous in a certain sense, as it allows for ventilation while simultaneously utilising the heat of the air that would be lost during conventional ventilation (the heat savings are approximately 2%). At an output of 10 kW, the air consumption is approximately 20 m^3/h, which corresponds to the hygienic minimum for air exchange in a typical apartment layout.
When loading, with the loading door open and the boiler's exhaust fan operating at full capacity, the air consumption is 100–200 m^3/h.
If the natural infiltration (micro-ventilation of windows and doors) does not provide a sufficient amount of air, it is necessary to ensure it through a ventilation opening from the outdoor environment with an area of at least 150 cm^2.
The control grilles on the ventilation openings must be positioned in such a way that they do not become blocked.

We recommend installing a carbon monoxide detector near the boiler.

5.10 Heating system design, connection of the boiler

5.10.1 Integrated-mixing system

The boiler is equipped with an integrated-mixing system where the internal thermostat (original Blaze Harmony thermostat with order code 801/400242 – see Boiler schematic, item 33) together with the internal mixing duct system ensures that the temperature of all heat transfer surfaces is above 60 °C. This protects the boiler against low-temperature corrosion even when connected without a controlled mixing branch (with a temperature-controlled mixing valve). This mixing works very well even with a gravity circulation setup. At return water temperatures lower than 50 °C, the integrated-mixing thermostat closes. The subsequent flow restriction is accompanied by an increase in the temperature of the outlet water. At very low return water temperatures (below 20 °C), the outlet water temperature may therefore exceed 90 °C, and the transmitted output is somewhat limited. At very low temperatures of the return water, the boiler start-up must be gradual to prevent overheating of the boiler.

If the boiler is connected in a circuit with controlled return water to the boiler (three-way or four-way valve with temperature-controlled mixing), the thermostat of the integrated mixing does not activate.

The integrated-mixing thermostat valve includes an opening to ensure minimum flow and venting. The size of the opening must be adjusted according to the type of circulation in the boiler circuit:

a) <u>Valve opening without modification:</u>

Used when the boiler circuit has fully forced circulation. This refers to boiler circuits where the circulation pump is connected directly in the boiler circuit or in bypass with a valve.

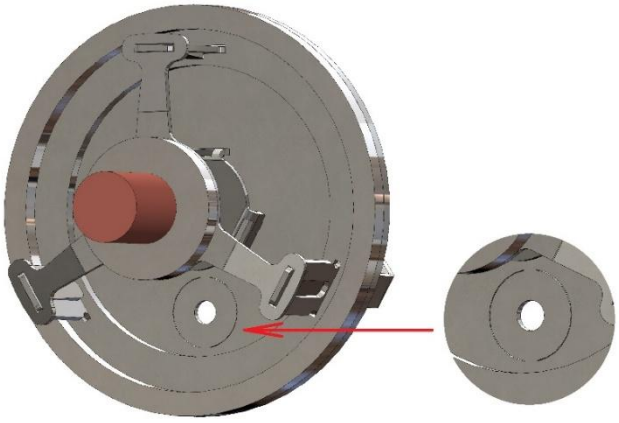

The valve with an opening, without modifications, is used in hydraulic diagrams no. 3, 4, 5, 6, 9, 10 (see chapter 5.11).

b) <u>Valve opening with an enlarged cross-section:</u>

Tilt the target in the valve by 90° (for example, using a screwdriver).

Used when the boiler circuit has gravity circulation or with a pump that indirectly participates in the circulation of the boiler (by injector effect). This refers to boiler circuits without a circulation pump or with a pump in a bypass without a valve (with an injector).

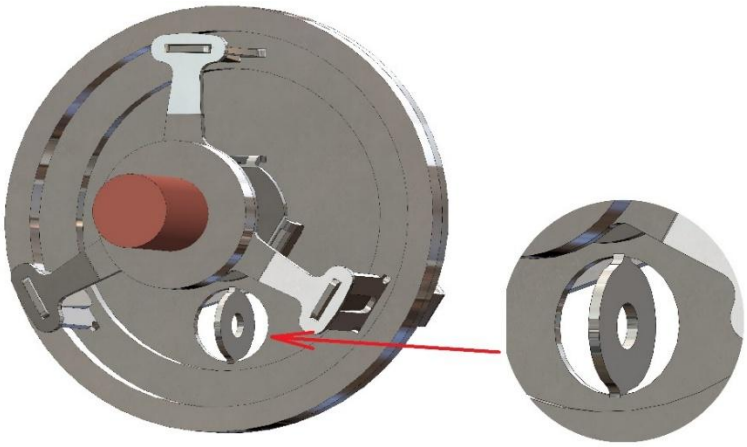

The valve with an enlarged cross-section is used in hydraulic diagrams no. 1, 2, 7, and 8 (see chapter 5.11).

5.10.2 Installation of the integrated-mixing thermostat

a) <u>BLAZE NATURAL PLUS 17:</u>

The integrated-mixing thermostat is already installed in the boiler as part of the standard boiler supply. In the case of removal or replacement of the integrated-mixing thermostat, proceed as follows:

- On the rear wall of the boiler, unscrew the M10 nuts (item 4, 5) and remove the cap with the O-ring (item 2, 3).
- Insert or remove the integrated-mixing thermostat (item 1) into the opening.
- Install the cap with the O-ring (item 2, 3, 4, 5).

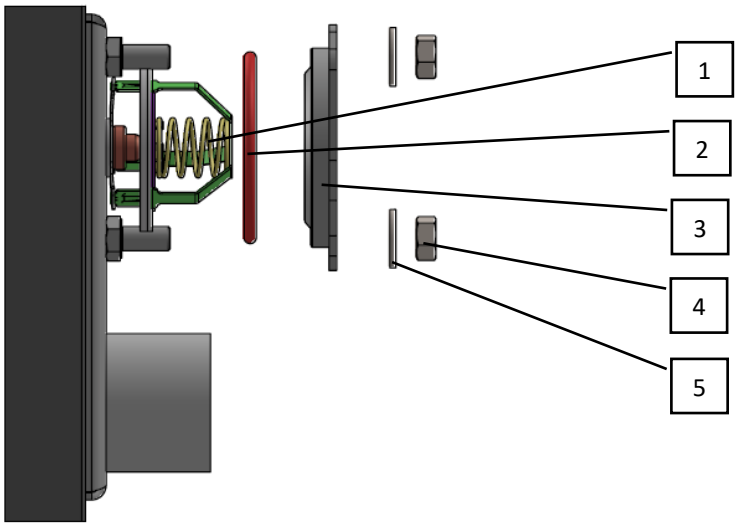

b) <u>BLAZE NATURAL PLUS 25 a BLAZE NATURAL PLUS 40:</u>

- Insert the integrated-mixing thermostat (item 1) into the 2 ½" socket on the rear wall of the boiler.
- Insert the pressure spring (item 2).
- Equip the reducer 2 ½" to 1 ½" (item 3) with threaded sealing and screw into the coupling.

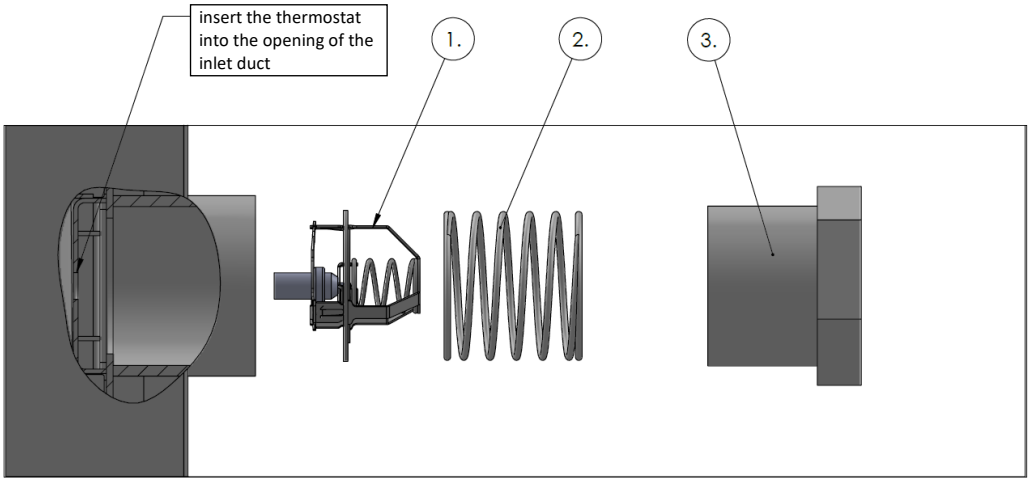

5.10.3 Size of the accumulation tank

The volume of the accumulation tank should allow for a discharged tank (i.e., cooled to 30–40 °C) to be capable of absorbing the energy of the entire fuel charge (heating by 50 °C) – see Table 7. If the volume of the tank is smaller, operating the boiler is more demanding (during the operation of the boiler, it is necessary to remove the appropriate amount of heat through the heating system, or it is not possible to load full amounts of fuel).

Table 7: Required volume of the accumulation tank

Boiler		BN17	BN25	BN40
Recommended minimum volume of the accumulation tank for softwood	[l]	450	750	1200
Recommended minimum volume of the accumulation tank for hardwood	[l]	750	1250	1850
Recommended maximum volume of the accumulation tank	[l]	1000	2000	3000

In a gravity circulation setup “boiler – accumulation tank”, it is necessary to increase the minimum accumulation volume by 10–20%.

We do not recommend a larger tank volume than the specified maximum due to disproportionate financial costs and significant heat loss.

5.10.4 Connection “boiler – accumulation tank” with gravity circulation (without pump)

Where the accumulation tank is located near the boiler, we recommend implementing the “boiler – accumulation tank” circuit using gravity circulation (without a pump, with larger-diameter pipes) – see connection diagram no. 1 (chapter 5.11.1). The acquisition costs are comparable to forced connection (the more expensive piping is offset by savings on the pump and accessories). The advantages of a gravity circulation setup are reliability and operational savings (in electricity) and maintenance-free operation.

The disadvantages of a gravity circulation setup are that the intensity of circulation (transmitted output) decreases proportionally with the charge of the accumulation tank, so at the end of charging the tank, the boiler cannot operate at full capacity (it achieves a charge of 80–90% of its capacity). We therefore recommend that, for a gravity circulation setup, the tank volume be 10–20% higher.

The gravity circulation circuit “boiler – accumulation tank” must be designed to transfer the nominal output of the boiler at a temperature difference of 90/60 °C. For example, this is achieved if the following conditions are met:

- The total length of the pipe is up to 4 m.
- Pipe bore 40 mm (including couplings connecting to the tank).
- The number of bends does not exceed 3 or the number of arcs does not exceed 6.
- The boiler and the tank are at least on the same height level (floor). The inlet to the tank is at least 50 cm (boiler up to 25 kW) or 80 cm (boiler 40 kW) above the outlet from the boiler. If the height of the ceilings allows, it is advantageous to place the tank higher (by 10 to 50 cm).
- If there is a backflow valve in the circuit, its pressure loss must be less than 0.3 mbar at nominal output and a temperature difference of 60/90 °C, (Kv < 3 m^3/h). For example, a gravity circulation valve specially developed for this type of boiler supplied by BLAZE HARMONY – see chapter 5.10.15. The standard horizontal valve (floating) is unsuitable due to high pressure loss.

Table 8: Conditions for a gravity circulation setup of a boiler with an accumulation tank

Model	A – minimum height of entry into the accumulation tank from the floor	Average pipe diameter between the boiler and the accumulation tank
BLAZE NATURAL PLUS 17	160 cm	6/4" (Cu 42 mm)
BLAZE NATURAL PLUS 25	180 cm	6/4" (Cu 42 mm)
BLAZE NATURAL PLUS 40	200 cm	6/4" (Cu 42 mm)

- It is essential to adhere to the conditions for the gravity circulation setup.

5.10.5 Connection “boiler - accumulation tank” with forced circulation (with pump)

Where the location of the accumulation tank allows at least partial gravity circulation (the tank and boiler are positioned at the same height), we recommend placing the boiler circuit pump in the bypass branch – see connection diagram no. 2 (chapter 5.11.2).

The advantage of this setup is better integrated-mixing functionality and improved gravity circulation capability (the pump does not restrict the flow). The recommended pipe diameter is 26–33 mm (Cu 28–35). In this setup, the circulation is mostly gravity circulation. The pump activates only when the temperature in the boiler exceeds, for example, 85 °C. We recommend installing a pump with a lower power (approximately 25 to 40 W).

The backflow valve in this setup must allow for gravity circulation – see chapter 5.10.15.

Where the location of the accumulation tank does not allow for even partial gravity circulation (the tank is located far away or at a height below the level of the boiler), the boiler circuit pump is placed “directly” into the return pipe from the tank to the boiler – see connection diagrams no. 3 (chapter 5.11.3), no. 4 (chapter 5.11.4), and no. 5 (chapter 5.11.5). The backflow valve in this setup does not have to allow for gravity circulation.

5.10.6 Residual boiler output

The connection must be designed to ensure the removal of residual boiler output, for example, in the event of a power outage.

In the event of a power outage, the exhaust fan will turn off, the valves will close, and combustion will be interrupted. The hot layer of fuel and the boiler lining still release heat for about 1 hour. To prevent overheating of the boiler, this residual heat must be reliably dissipated – see chapters 5.10.7 and 5.10.8.

The amount of residual heat is 5–10 MJ depending on the instantaneous output of the boiler and the fuel being burned.

5.10.7 The most suitable method for dissipating residual heat

If possible, we recommend connecting the boiler in such a way that the discharge of residual output is ensured by gravity circulation to the accumulation tank or to the heating system (see recommended connections). The standard circulation pump has a bore of approximately 3/4", which allows for sufficient gravity circulation to remove residual output. Any filters and backflow valves must not have excessive pressure loss (*$\sum Kv \geq 10 m^3/h$).*

5.10.8 Other methods of dissipating residual heat

If it is not possible to use gravity circulation to transfer residual heat to the heating system or accumulation tank, another method must be chosen, e.g.:

1. Connect an**automatic cooling system** (see chapter 5.12).
2. Connect the boiler with a gravity branch with a combined DHW storage tank that can accommodate excess thermal output during a power outage. The volume of the DHW storage tank should be at least 120 litres, with the residual output of the boiler causing its heating by 10 to 20 °C. Due to the risk of scalding, it is recommended to equip the outlet from the DHW storage tank with a thermostatic mixing valve or to use thermostatic faucets.
3. Use a **backup power source** for the circulation pump. It is necessary to use a sine wave source for the supply voltage.
4. Use a suitably connected **open expansion vessel**. In the event of a power outage, the excess power is dissipated by boiling.

5.10.9 Water

For filling the boiler, we recommend using soft water, free from mechanical impurities and chemically inactive. The designer may suggest suitable additives for the water in the heating system.

5.10.10 Open expansion vessel

If there is an open expansion vessel in the system, it must be positioned so that it does not freeze. Its oxygenation can be limited by a thin layer of oil on the surface. The volume of the expansion vessel must be at least 5% of the total volume of water in the heating system.

5.10.11 Connection of the boiler to an existing system

If the boiler is installed in place of another type of boiler and an existing mixing valve remains in the circuit to protect the return – see connection diagrams no. 6 (chapter 5.11.6) and no. 10 (chapter 5.11.10), it is necessary to assess the overall functionality of the connection in terms of residual heat removal and, if necessary, install suitable safety devices according to chapters 5.10.7 and 5.10.8. An integrated-mixing thermostat (original Blaze Harmony thermostat – see boiler schematic, item 33) is not installed in this case.

5.10.12 Connection of the boiler with an accumulation tank

If possible, it is more advantageous to have 1 large tank than 2 small ones. From an investment perspective, it is cheaper, has smaller footprint and thermal loss due to cooling from the surface, and the connection is simpler. In the case of two tanks, a branching connection is usually used (for uniform flushing), while for more than two tanks, the Tichelmann system is employed.

If necessary, it is possible to place the tank in another part of the building, or on another floor.

If there is no suitable space in the heated building, heating can be carried out from a nearby building (garage, workshop) that houses the boiler and usually also the tank. Ground pre-insulated pipes can be used to connect buildings:

The automatic air vent located directly on the top outlet of the tank can be a source of problems. The potential water leak is difficult to detect; moisture in the insulation can cause corrosion of the tank body.
We recommend connecting the outlet to the heating system to the top coupling of the tank; otherwise, at least 10% of the tank capacity will remain unused. This is not necessary for tanks that are equipped with an internal pipe as shown in the figure:

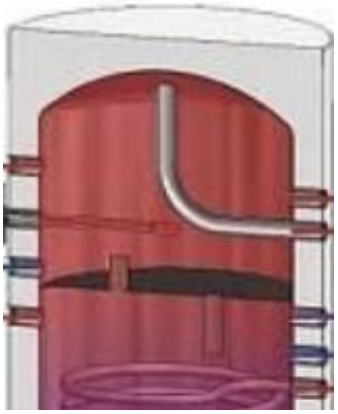

5.10.13 Connection of the boiler without an accumulation tank

The boiler can be connected to a system with forced or gravity circulation.
Connection without an accumulation tank is only possible if the installation meets the conditions in chapter 1.4.

5.10.14 Condition of non-disconnection of the system

In a setup without an accumulation tank, the heating system must be designed so that it can draw at least 50% of the nominal output of the boiler. For example, it is not possible to use a master regulator with a room thermostat or a system with thermal valves. Regulatory elements (valves of individual branches or elements) must not be closed in such a way that the capacity of the system to extract thermal output from the boiler is excessively reduced.

5.10.15 Gravity circulation valve BLAZE HARMONY

Usage:
The gravity circulation valve BLAZE HARMONY prevents back circulation in the circuit “boiler – accumulation tank”.
In the circuit “boiler – accumulation tank”, it is possible to install a valve that prevents the reverse circulation “accumulation tank-boiler” when the tank is heated and the boiler is not operating for an extended period. The thermal output that escapes into the boiler room is relatively small, as the air supply to the boiler is closed off by a valve during downtime (100 – 300 W depending on the temperature in the tank). In the boiler rooms located in the building, this heat is used for heating and thus a backflow valve is not needed.

Description:
The outer body of the valve consists of a welded steel body with access covers on both sides. The valve itself is housed in a “self-adjusting” blade bearing. The closing force of the valve itself is generated by the weight of an offset counterweight (gravitational principle). The valve, the bearing and the seating ring (seat) are made of stainless steel. The valve only operates in the position with the outlet directed vertically upwards.

Parameters:

Weight: 3 kg
Dimensions: 155 x 145 x 80 mm
Inlet: g 6/4" (external thread)
Outlet: G 6/4" (internal thread)

Pressure loss diagram

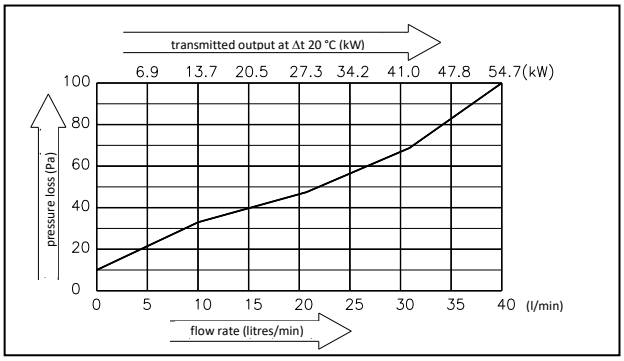

Diagram:

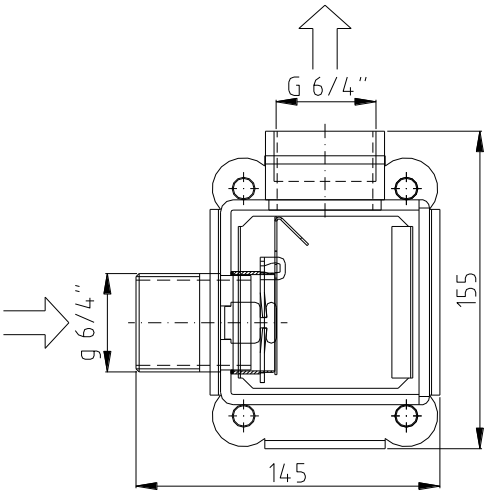

Installation:

1. The valve must be installed on the pipe so that its outlet points vertically upwards.
2. The valve can be connected directly to the outlet coupling from the boiler.
3. The valve can be installed on both the return and outlet pipes – see connection examples:

Connection to the boiler outlet pipe

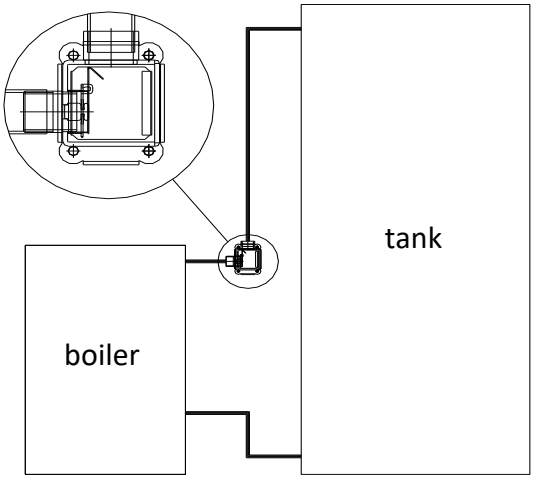

Connection to the boiler inlet pipe

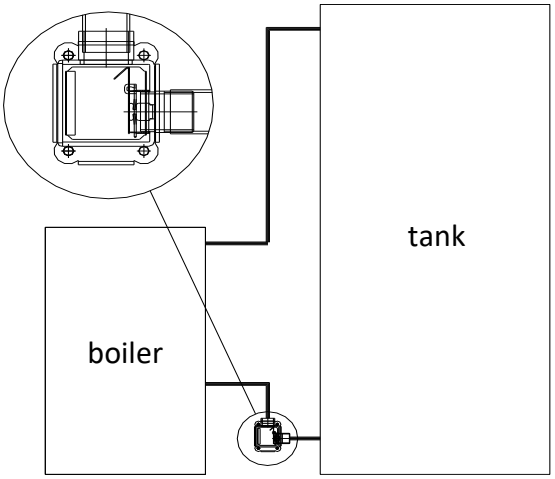

Maintenance, function check:

The valve requires no maintenance. The proper functioning is recognised by the fact that the boiler cools down after being turned off, even though the accumulation tank remains heated. If the boiler is heated by heat from the tank, we recommend draining the water, removing the valve cap, and checking whether any obstruction or foreign object is preventing the proper seating of the valve on the ring (seat). Alternatively, contact a service technician

5.11 Hydraulic connection diagrams

Each installation must be equipped with a thermomanometer located as close as possible to the water outlet from the boiler (see the connection diagrams, item 62). The thermomanometer is not part of the boiler.

All hydraulic connection diagrams displayed here are for informational purposes only and do not replace the heating project! This is prepared by a qualified heating system designer.

5.11.1 Connection diagram 1 – gravity circulation setup

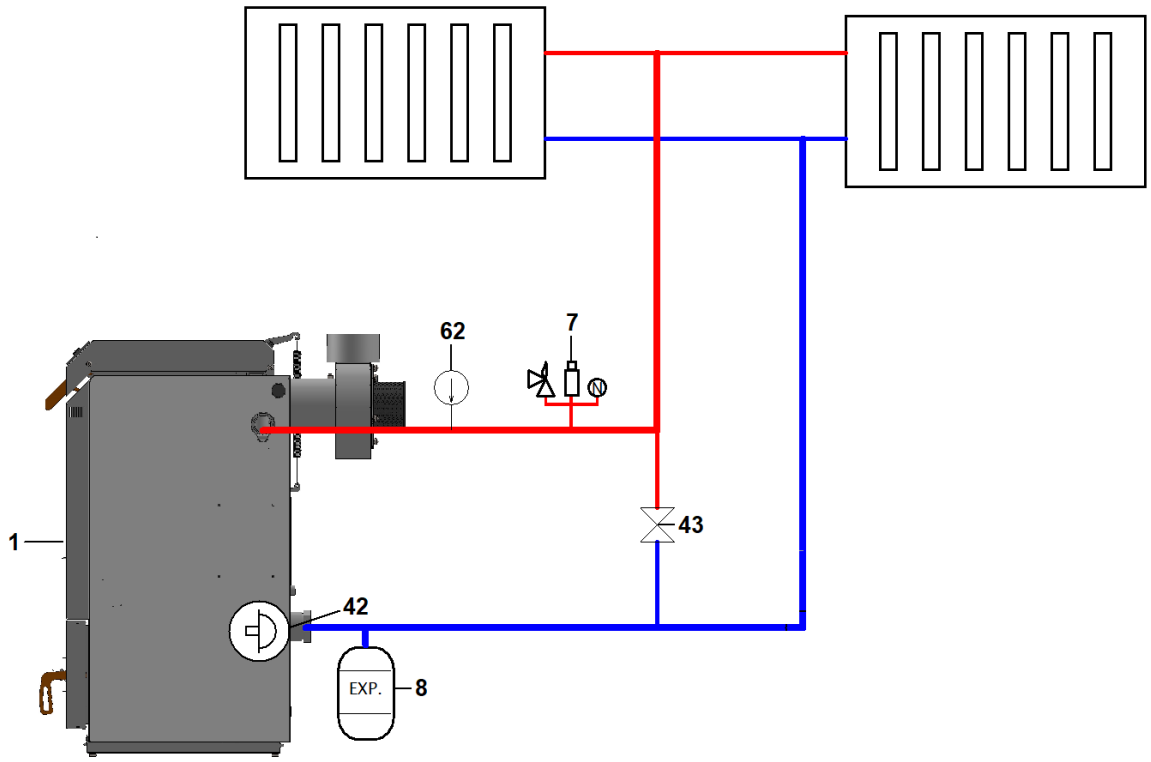

1 – BLAZE NATURAL PLUS boiler
7 – safety group (vent valve, manometer, safety valve)
8 – expansion vessel
42 – integrated-mixing thermostat
43 – balancing ball valve
62 – thermomanometer

5.11.2 Connection diagram 2 – combined setup with a pump in a bypass with an injector

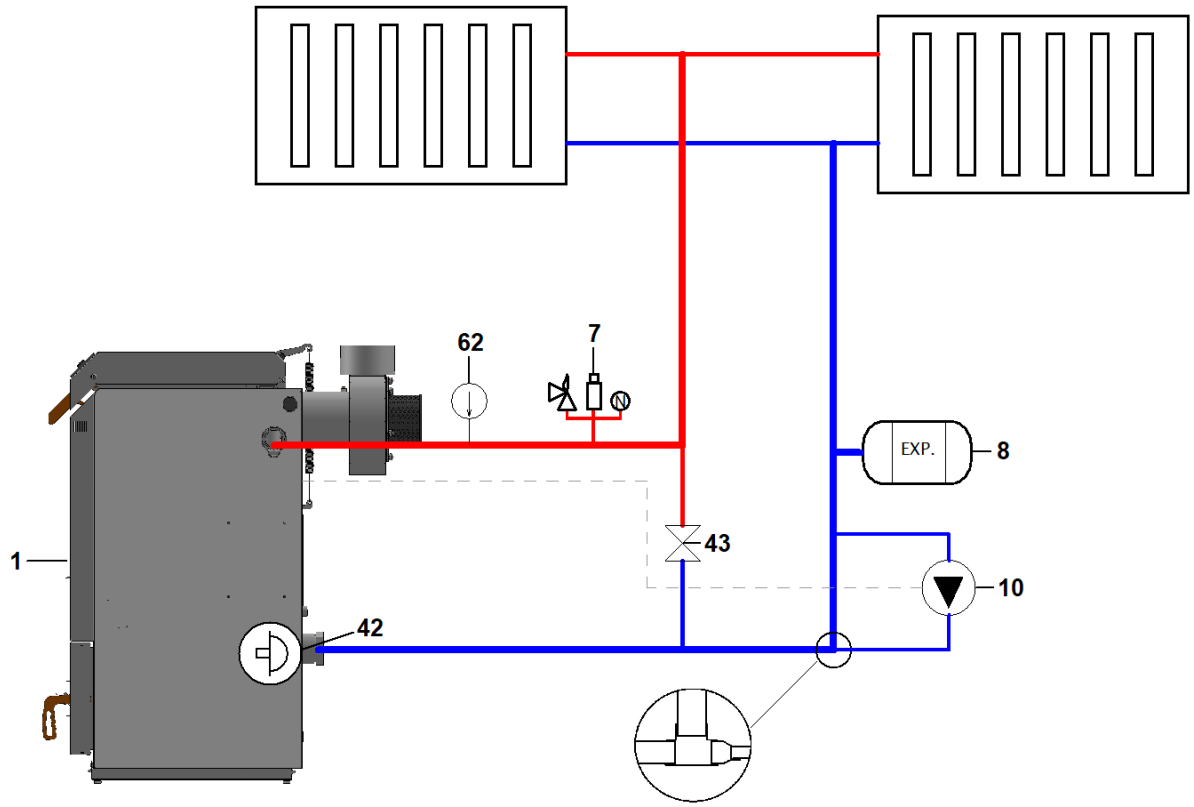

1 – BLAZE NATURAL PLUS boiler
7 – safety group (vent valve, manometer, safety valve)
8 – expansion vessel
10 – boiler pump
42 – integrated-mixing thermostat
43 – balancing ball valve
62 – thermomanometer

5.11.3 Connection diagram 3 – forced setup with gravity circulation cooling into the heating system

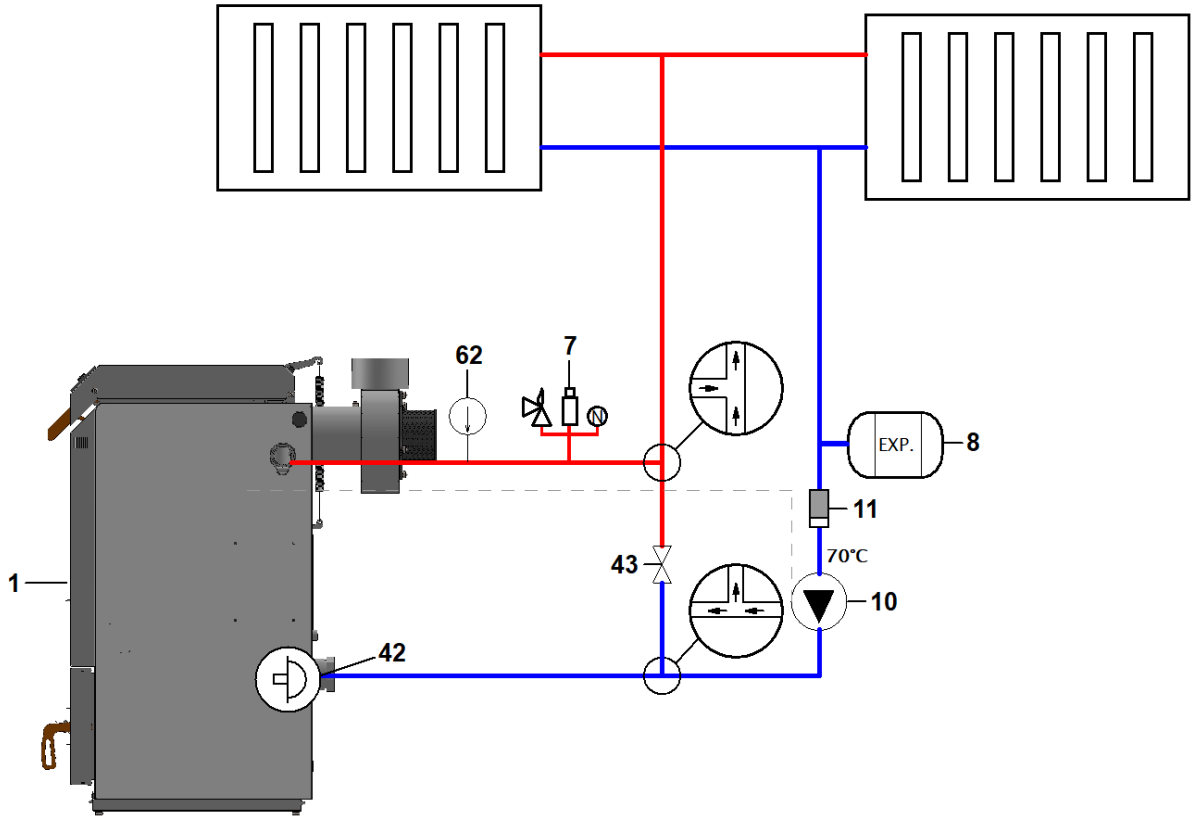

1 – BLAZE NATURAL PLUS boiler
7 – safety group (vent valve, manometer, safety valve)
8 – expansion vessel
10 – boiler pump
11 – filter
42 – integrated-mixing thermostat
43 – balancing ball valve
62 – thermomanometer

5.11.4 Connection diagram 4 – forced setup with gravity circulation cooling into the DHW tank

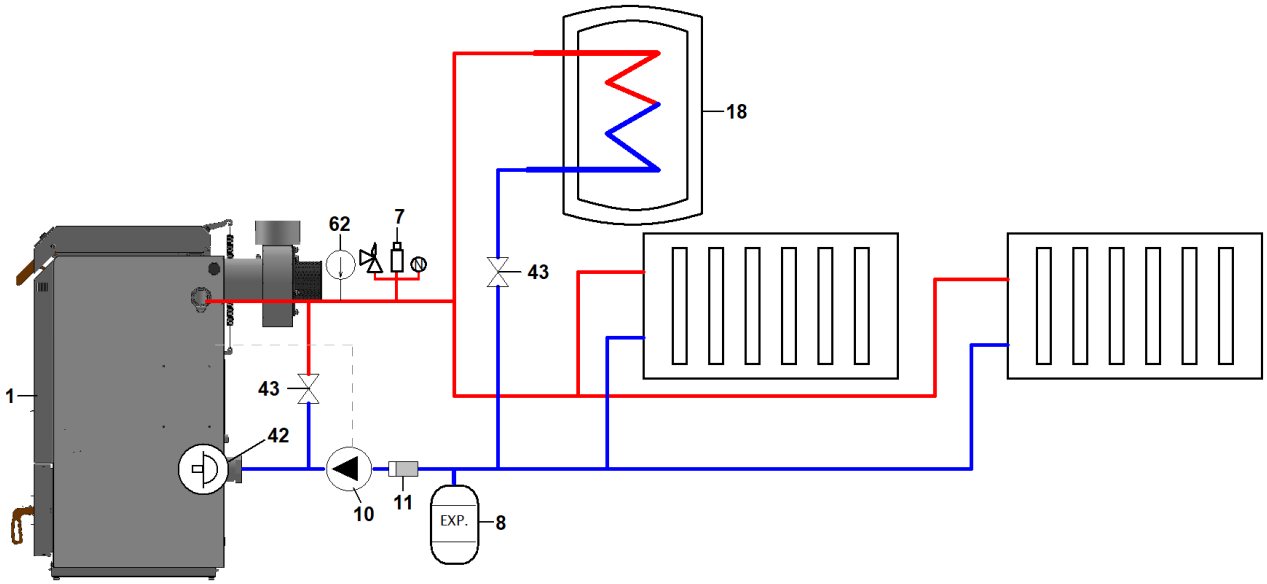

1 – BLAZE NATURAL PLUS boiler
7 – safety group (vent valve, manometer, safety valve)
8 – expansion vessel
10 – boiler pump
11 – filter
18 – DHW storage tank
42 – integrated-mixing thermostat
43 – balancing ball valve
62 – thermomanometer

5.11.5 Connection diagram 5 – forced setup with emergency cooling

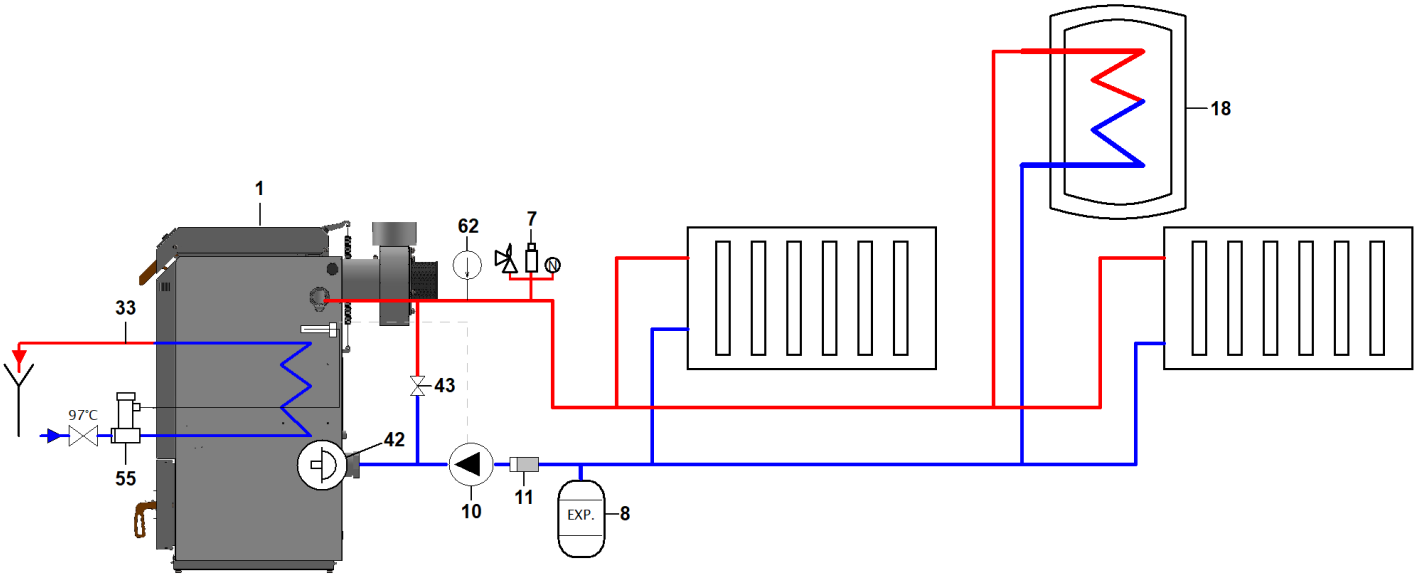

1 – BLAZE NATURAL PLUS boiler
7 – safety group (vent valve, manometer, safety valve)
8 – expansion vessel
10 – boiler pump
11 – filter
18 – DHW storage tank
33 – cooling water outlet
42 – integrated-mixing thermostat
43 – balancing ball valve
55 – cooling thermostatic valve
62 – thermomanometer

5.11.6 Connection diagram 6 – forced setup with a thermostatic mixing valve and emergency cooling

Example of connection to an existing circuit where protection for the return line has already been implemented (e.g., with a loading device, a three-way thermostatic mixing valve, etc.). The integrated-mixing thermostat must be removed from the boiler.

Automatic cooling system (33) for the removal of excess heat connected.

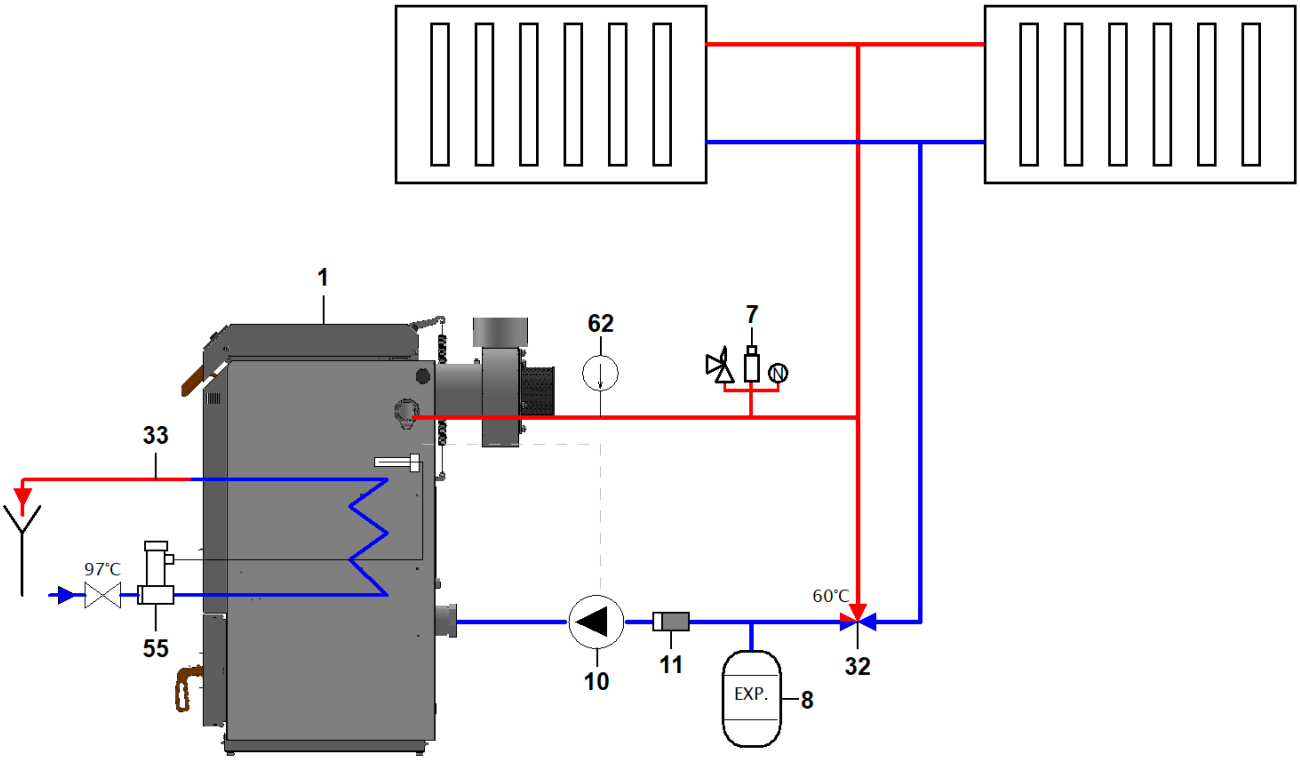

1 – BLAZE NATURAL PLUS boiler
7 – safety group (vent valve, manometer, safety valve)
8 – expansion vessel
10 – boiler pump
11 – filter
32 – thermostatic mixing valve
33 – cooling water outlet
55 – cooling thermostatic valve
62 – thermomanometer

5.11.7 Connection diagram 7 – gravity circulation setup with an accumulation tank

Automatic cooling system for the removal of excess heat not connected.

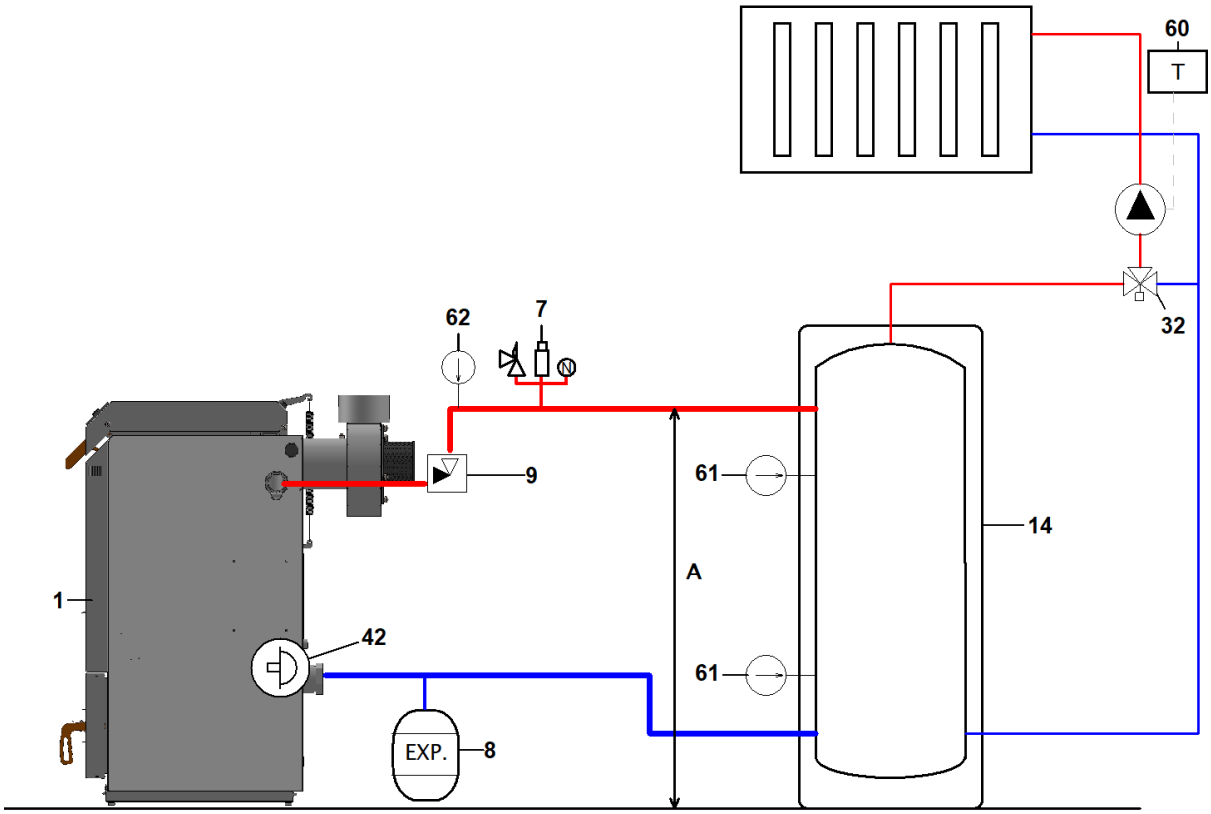

1 – BLAZE NATURAL PLUS boiler
7 – safety group (vent valve, manometer, safety valve)
8 – expansion vessel
9 – special gravity backflow valve
14 – accumulation tank
32 – thermostatic mixing valve (30–70 °C)
42 – integrated-mixing thermostat
60 – room thermostat for the heating system pump
61 – thermometer
62 – thermomanometer

Table of conditions for the gravity circulation setup of the boiler with an accumulation tank – see chapter 5.10.4.

5.11.8 Connection diagram 8 – combined setup with an accumulation tank with an injector

It is used where the conditions do not allow sufficient gravity circulation "boiler – accumulation tank". Gravity circulation is capable of charging the accumulation tank to only 50–70% of its capacity. Automatic cooling system for the removal of excess heat not connected.

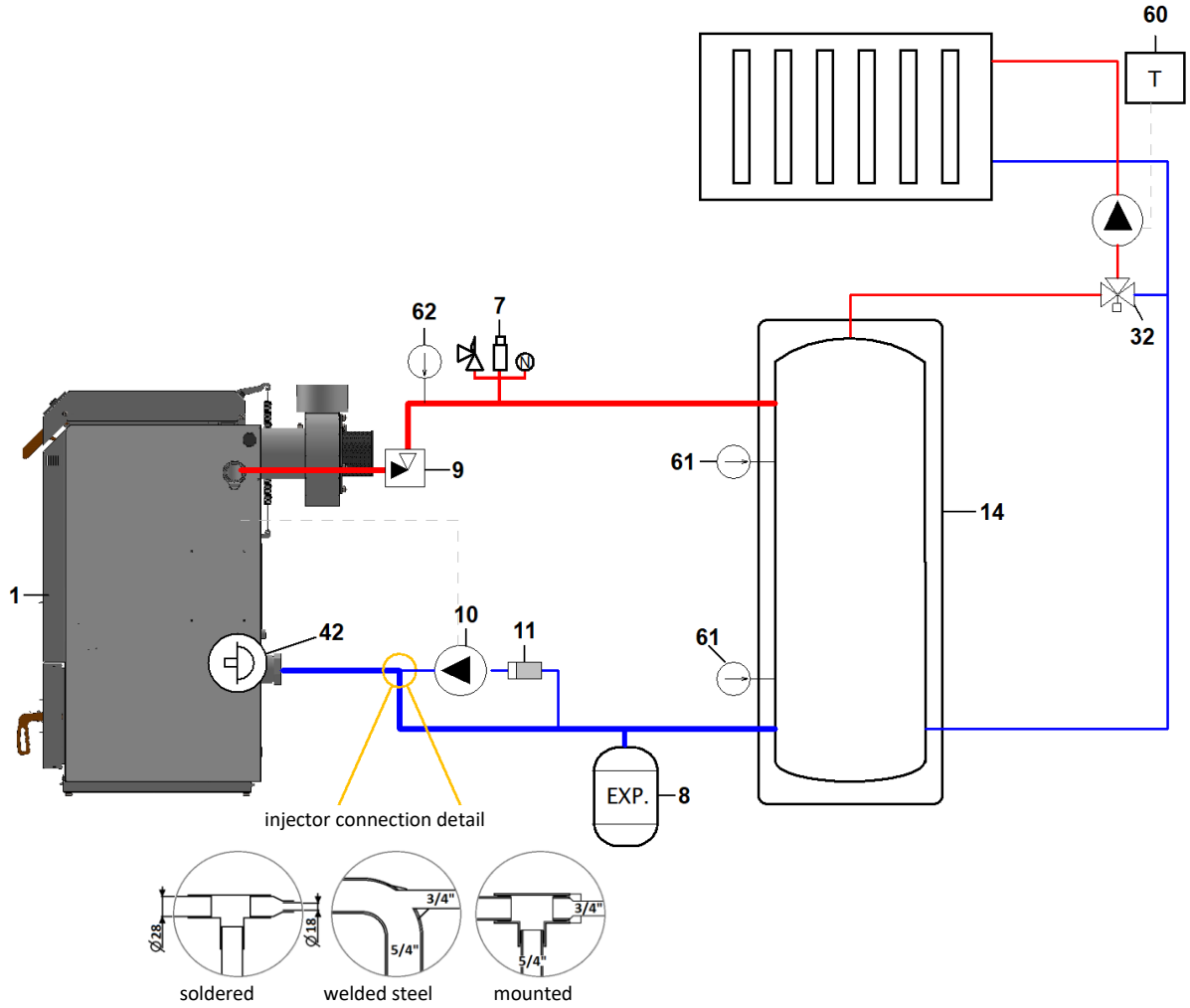

1 – BLAZE NATURAL PLUS boiler
7 – safety group (vent valve, manometer, safety valve)
8 – expansion vessel
9 – special gravity backflow valve
10 – boiler pump
11 – filter
14 – accumulation tank
32 – thermostatic mixing valve (30–70 °C)
42 – integrated-mixing thermostat
60 – room thermostat for the heating system pump
61 – thermometer
62 – thermomanometer

5.11.9 Connection diagram 9 – forced setup with an accumulation tank

It is used where conditions do not allow even partial gravity circulation "boiler – accumulation tank". Automatic cooling system for the removal of excess heat connected.

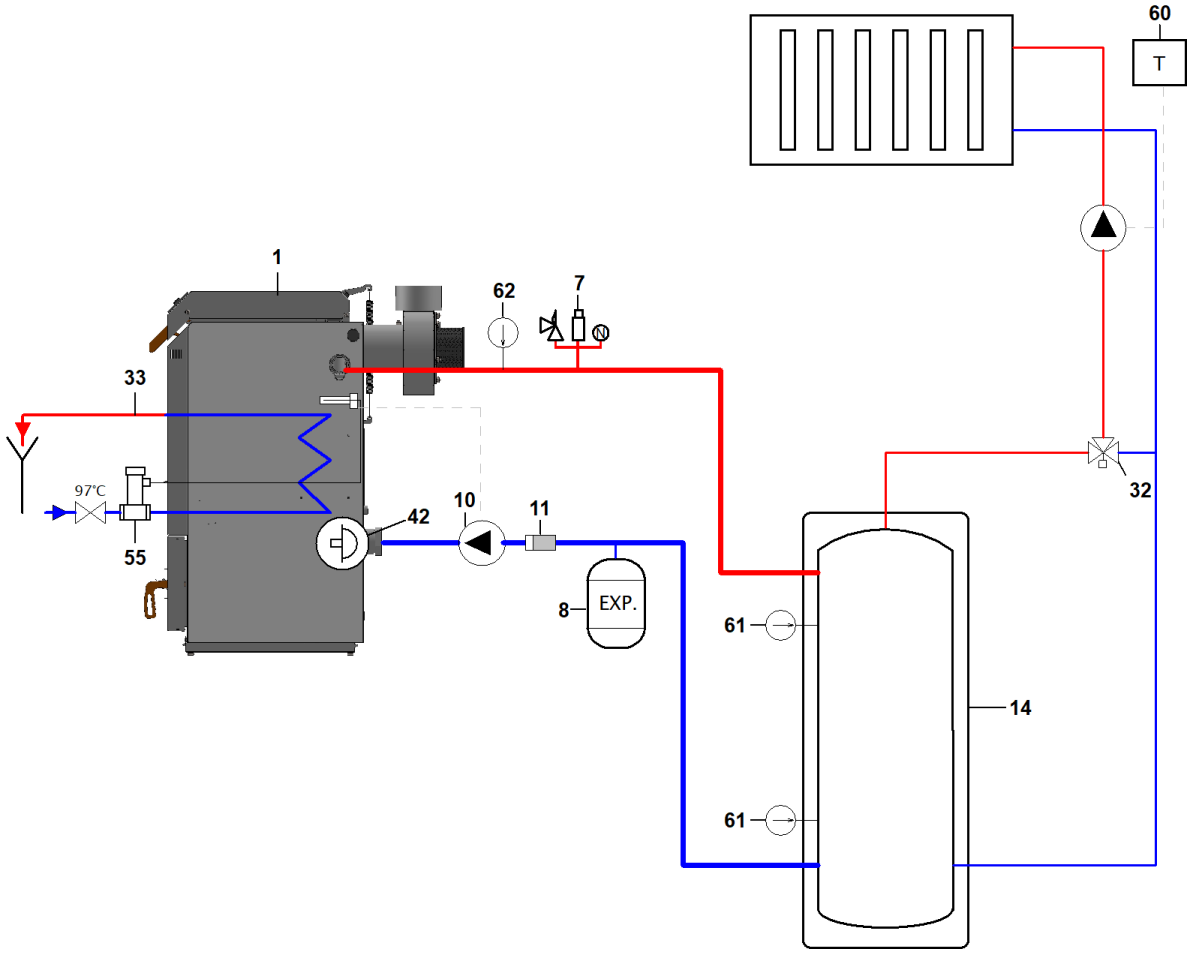

1 – BLAZE NATURAL PLUS boiler
7 – safety group (vent valve, manometer, safety valve)
8 – expansion vessel
10 – boiler pump
11 – filter
14 – accumulation tank
32 – thermostatic mixing valve (30–70 °C)
33 – cooling water outlet
42 – integrated-mixing thermostat
55 – cooling thermostatic valve
60 – room thermostat for the heating system pump
61 – thermometer
62 – thermomanometer

5.11.10 Connection diagram 10 – forced setup with a thermostatic mixing valve, accumulation tank and emergency cooling

Example of connection to an existing circuit where protection for the return line has already been implemented (e.g., with a loading device, a three-way thermostatic mixing valve, etc.). The integrated-mixing thermostat must be removed from the boiler.

Automatic cooling system (33) for the removal of excess heat connected.

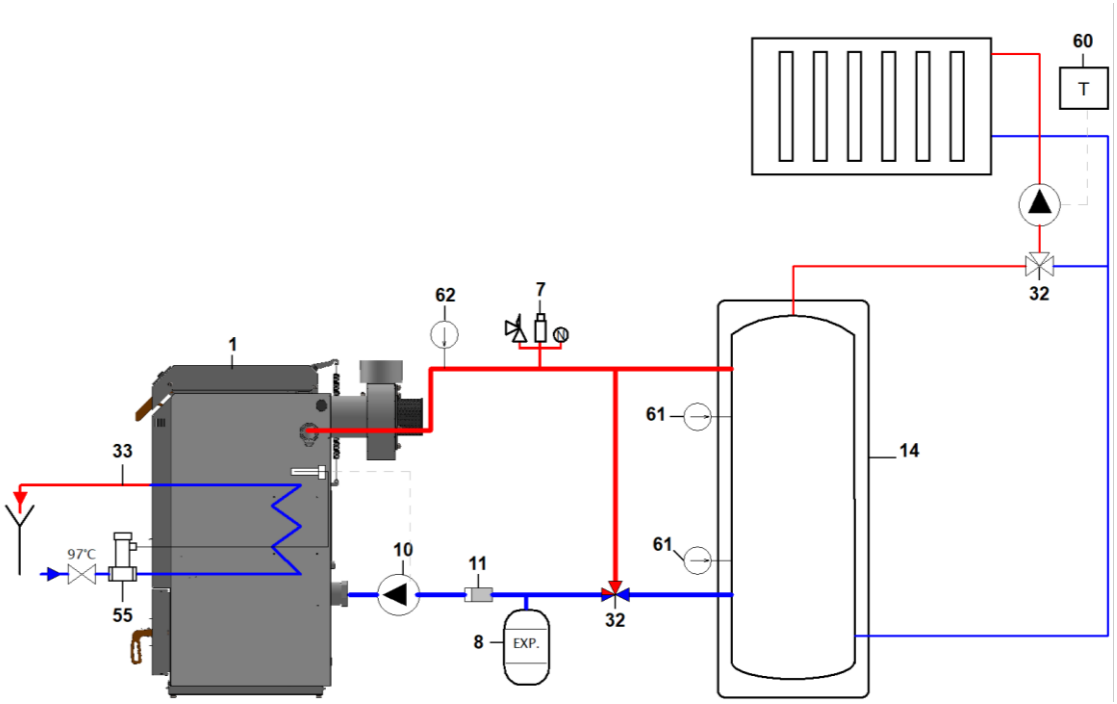

1 – BLAZE NATURAL PLUS boiler
7 – safety group (vent valve, manometer, safety valve)
8 – expansion vessel
10 – boiler pump
11 – filter
14 – accumulation tank
32 – thermostatic mixing valve (30–70 °C)
33 – cooling water outlet
55 – cooling thermostatic valve
60 – room thermostat for the heating system pump
61 – thermometer
62 – thermomanometer

5.12 Connection of automatic cooling

Cooling uses utility water from the mains with an inlet pressure of 2-4 bar and a temperature of up to 25 °C. A pressure reducing valve must be installed at higher pressures. The water supply must not depend on the supply of electricity, i.e., a domestic water pump cannot be used. As a safety valve for the cooling circuit, you can use, for example, WATTS STS 20 with an opening temperature of 97 °C.

Connect the cooling water inlet to the lower coupling (39) via the safety valve and the cooling water outlet to the upper coupling (37). The temperature sensor of the cooling fitting is screwed into the well (42). Connect the outlet of the cooling loop to the sewer, e.g. via a hose. We recommend installing a filter on the inlet of the cooling circuit.

If the water temperature in the boiler exceeds 97 °C, the safety valve will open and water from the mains will start to flow through the cooling circuit. The excess boiler output is thus discharged into the sewer.

WARNING!!! It is important to ensure the correct connection of the safety lock to the INLET of the cooling water to the heat exchanger.

The automatic cooling system MUST NOT be under constant pressure, otherwise it can be damaged.

5.13 Electric connection

The boiler contains a flexible cord with a plug that connects to a standard socket with an electric voltage of 230V/50Hz.

5.13.1 Boiler pump connection

The controller can control the boiler pump according to the set parameters. Its electrical connection is made via a connector located on the rear wall of the boiler as shown in the following picture:

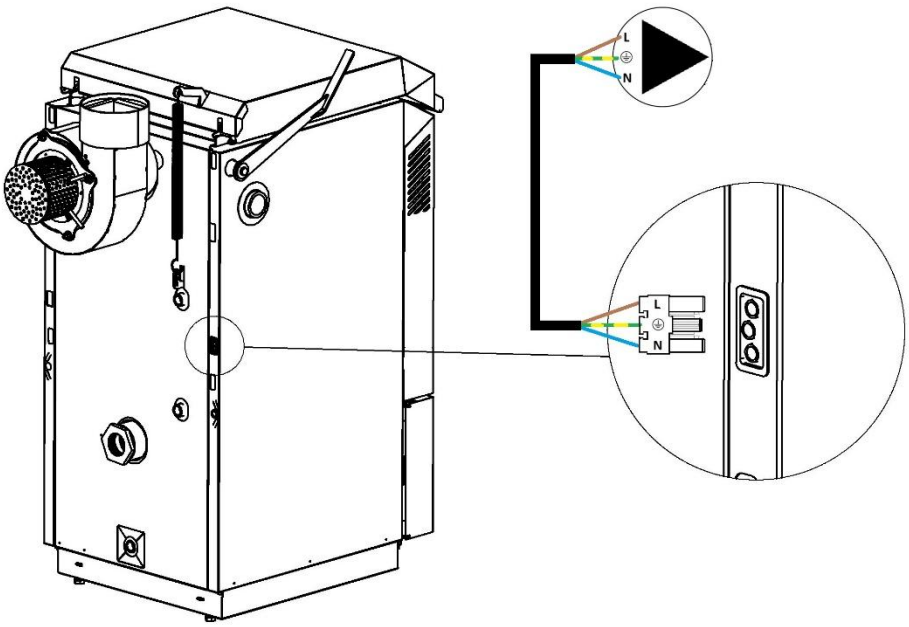

6 Boiler operation by the user

To ensure the reliable and safe operation of the boiler, the operator must strictly follow the instructions provided in this boiler operating manual.

6.1 First commissioning of the boiler

When the boiler is first put into operation, the surfaces of the heat exchange areas are metallically clean, leading to more efficient heat transfer. As a result, the temperature of the flue gases is lower than what corresponds to the standard condition.
Because the boiler regulator calculates the output value based on the temperature of the flue gases, it results in the actual output of the boiler being approximately 50% higher when it is first ignited than what is set on the regulator.
The duration of the fuel combustion is correspondingly shorter as a result. Within 2 to 5 operating days, the heat exchange surfaces will be covered with a standard layer of deposits, and the achieved performance will correspond to the set value.
Upon initial commissioning, we recommend setting the desired output to 30% and, after a few days of operation, increasing it to 40–70% depending on the combustion quality and the needs of the building.
The above-mentioned fact is not a defect.

6.2 Ignition, refuelling

Before ignition, it is necessary to check and, if necessary, secure:

- **Functionality of air valves, making sure they are not stuck.**
  Check through the opening in the front cover of the boiler (see the red arrow in the image).

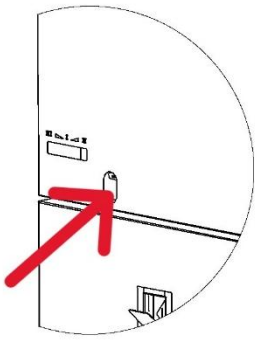

- Ensure that the heated building (possibly along with the accumulation tank) takes in the produced heat (see chapter 5.10.6).
- Functionality of the heating system (circulation pumps, water quantity, water pressure, bleeding, provided there has been no freezing, …).
- Tightness of the upper and lower doors.
- Functionality of flue pipes (condition, tightness, …).
- Functionality of the loading chamber and combustion chamber (condition, correctness of the assembly of ceramic tiles, …).
- Make sure the side and rear heat exchanger (turbulators can be moved) and the combustion and loading chamber are not excessively clogged.
- Make sure there are foreign objects in the boiler.

- Functionality of the boiler and heating system control and safety elements (safety valves, water boiler regulator, thermostats, ...).
- Connection of the boiler to the mains (230V/50Hz).

To ignite the boiler, proceed as follows:

1) On the regulator, press the LOADING button. Lift the handle of the loading door and slightly open the door. Wait a few seconds for any wood gas to be drawn off (and there is no smoke in the loading chamber) and then open the loading door completely.
2) If there are enough charred residues at the bottom of the boiler (at least 20 cm), usually it is sufficient to light a piece of paper and toss it onto the layer of cinder. Then add a few pieces of fuel. This ensures that the flames do not shoot upwards, but flow over a layer of cinders, igniting them.
3) If there is not a sufficient layer of cinder residues at the bottom of the boiler, place smaller logs in the loading chamber. Lay them out so that there are gaps between them (intersecting with each other). This layer should approximately fill the lower narrowing part of the loading chamber. On this layer, stack small chips or wood shavings. Place a lit crumpled paper on the chips. It is advisable for the paper to cover the entire surface of the inserted fuel. Then add more logs to the lit paper so that the flames do not shoot upwards, but downwards through the layer of wood.
4) Close the upper door so that it remains ajar by 1 to 2 cm. You can achieve this by closing the door with the closing handle pressed down. Let it blaze for about 5 minutes as needed.
5) When you make sure that the fire has ignited (by looking through the sight glass or judging by the rise in flue gas temperature), load the boiler with fuel (see chapter 6.3) and properly close the door. If properly ignited, the boiler will reach its nominal output in approximately 30 minutes. If the flame is extinguishing or flickering, it is possible to briefly open the top door to rekindle it.

It is prohibited to use flammable liquids for ignition. It is prohibited to exceed the nominal output of the boiler by any unacceptable means.

No flammable objects must be stored near the boiler. Ash must be stored in non-combustible containers with lids.

Especially before the first operation of the boiler, but also after its cleaning, check the correctness of the assembly of ceramic parts in the combustion chamber. Incorrect assembly worsens the quality of combustion, leading to excessive fouling of both the boiler and the chimney. It is also important to place the plugs under the rear tiles, otherwise, the boiler may be damaged.

Place the **logs** in the loading chamber tightly together so that there is as little free space between them as possible. The first logs should be smaller so that the fuel ignites more easily. The last logs should be smaller again, as they break down better into the base layer.

You can prevent **smoking during loading** by only loading when the previous batch of fuel has burned down to the point where there are only glowing ember remnants in the loading chamber – the base layer.
It is possible to refuel by initially opening the loading door only partially and adding just 3 to 4 logs. This covers the hot layer and does not release as much smoke. Then open the door completely and add more fuel.
If smoke is released into the boiler room when refuelling, check whether the flue gas path (flue pipe, chimney) is blocked and whether there is sufficient air supply to the boiler room. When refuelling, you can open the window in the boiler room.

The ash from the bottom of the loading chamber usually does not need to be removed. During operation, it is swept by the nozzle into the combustion chamber. However, we recommend checking and removing the layer of ash from the bottom of the loading chamber once or twice a month – see chapter 6.8.

Do not open the lower door while the boiler is in operation. The combustion will be interrupted, and there is a risk of smoke releasing into the boiler room.

6.3 Amount of loaded fuel, refuelling intervals

Normally, you should fill the whole loading chamber when refuelling. **If, however, the consumption of heat by the heating system (transitional period during spring and autumn) is small, or if the accumulation tank is heated, it is necessary to extend the loading intervals or to load smaller amounts of fuel.** However, we do not recommend loading less than half of the volume of the loading chamber. With a small fuel dose, the burning

time may be shortened so much that a quality stable ember level function cannot be established. The residual fuel is then not completely carbonised and smoulders.

Do not refuel if the heating system (building or accumulation tank) is not able to absorb the released heat! There is a risk of overheating and emergency shutdown of the boiler.

If the heating system were unable to absorb the heat from the fuel charge, it would lead to overheating (water temperature above 95 °C) and an emergency shutdown of the boiler with unburnt fuel. Unburnt fuel smoulders during the shutdown, and the flue gas and air paths of the boiler become clogged with moisture and tar. This threatens proper functioning, reduces the lifespan of the boiler and chimney, and pollutes the air.

The stable ember level shutdown occurs with a basic hot ember layer that does not contain volatile combustibles or moisture.

6.4 Setting the desired boiler output

The boiler output can be adjusted using the regulator knob on the control panel. The current value of the boiler output is determined by the temperature of the flue gases and the temperature of the output water from the boiler. The regulator controls the speed of the exhaust fan to match the set value.
An output of 100% corresponds to a flue gas temperature of approx. 160 °C with a boiler water temperature of 70 °C.
An output of 30% corresponds to a flue gas temperature of approx. 110 °C with a boiler water temperature of 70 °C.

Do not operate the boiler at a higher output than necessary! It unnecessarily shortens the operating time and prolongs the downtime. Parameter *"Required boiler output"* is recommended to be set to a value between 40 and 70%, and if the output is insufficient during higher heat consumption (in winter), it should be increased as needed.

6.5 Automatic stable ember level function

The boiler is equipped with a so-called stable ember level function, which turns off the exhaust fan before the fuel charge is completely burned out. This leaves a base layer of embers in the boiler until the next load. The detection of burnout to the basic layer is ensured by a movable detection arm in the front wall of the loading chamber. This arm is pressed against the wall by the fuel after refuelling. During operation, the fuel level gradually drops and the arm is gradually exposed. When the fuel level drops below the end of the detection arm, the arm releases and, under the influence of the counterweight, tilts into the loading chamber and activates the stable ember level function. The regulator will then turn off the fan, closing the air valves and the boiler will switch to STOP mode.

The automatic stable ember level function can be deactivated by pressing the LOADING button (3s); in OPERATION mode, this state is indicated by a flashing fuel indicator.

The optimal base layer should roughly fill the lower tapering part of the loading chamber. The base layer must not contain smouldering fuel residues, as these clog the boiler with tar during downtime. We do not recommend loading small amounts of fuel. We recommend that the last pieces of the fuel charge be smaller (split logs), so that they break down into the base layer more easily during combustion.

6.6 Control and adjustment of combustion

During operation, ensure that combustion occurs as perfectly as possible. Imperfect combustion reduces the efficiency of the boiler and produces excessive amounts of harmful substances (hydrocarbons, especially tar),

which pollute the atmosphere and clog the boiler and flue pipes. The quality of combustion is not determined solely by the type and moisture of the fuel, but it can also be significantly influenced by the way we load the fuel and how we regulate the output.
The quality of combustion during operation can be assessed by observing the flame through the sight glass. Good combustion makes the smoke rising from the chimney invisible. A light white smoke that dissipates immediately is not a problem; it is caused by the water vapour produced during combustion.

The condition for efficient combustion is the correct amount of secondary air.

Excessive secondary air causes an excessive amount of air to not participate in combustion, cools the flame, and carries heat uselessly to the chimney. The flame is sharp, flickering, or not present at all. The ember residues in the combustion chamber, touched by the flame, have a light yellow colour on the edges. **It is necessary to limit the amount of secondary air, i.e. move the shutter to the left**.

Insufficient secondary air causes part of the combustible material not to burn and to exit into the chimney. The flame is long, sometimes it smokes. The ember residues in the combustion chamber, touched by the flame, have the same colour across the entire surface. Smoke is rising from the chimney, which does not dissipate even when the humidity of the air is lower. **It is necessary to increase the amount of secondary air, i.e. move the shutter to the right**.

Pre-drying air (left half of the shutter range) is intended only for fuel that burns very poorly when set in the middle position of the shutter , e.g. softwood, unsplit logs.
Incorrect use of pre-drying air (with quality fuel) can cause overheating of the walls of the loading chamber and loading door, leading to their damage.

Do not confuse smoke and steam. Flue gases contain water vapour, which condenses above the chimney and creates a misty haze (similar to gas heaters). Usually, if it is not too humid, the mist will dissipate (evaporate) within a few metres.

The quantity of secondary air can be adjusted using the sliding shutter (see Boiler schematic, item 8).
Positions of the secondary-air shutter according to the type of fuel:

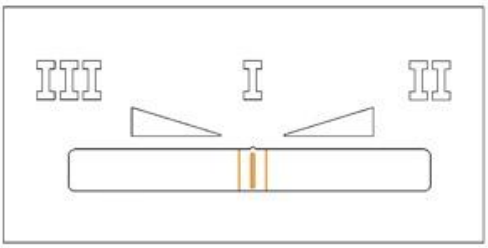

Shutter in the middle
maximum primary air

- Moderately reactive fuel – maximum primary air.
  In the BN25 and BN40 models, the usual position for standard firewood.
  In the BN17 model, the usual position for smaller pieces of fuel or quality hardwood (beech).

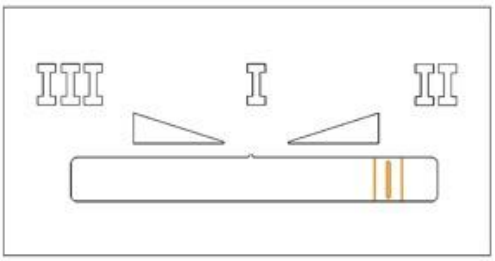

Shutter on the right
maximum secondary air

- Very reactive fuel – maximum secondary air.
  In the BN25 and BN40 models, the usual position for smaller pieces of fuel or quality hardwood (beech).
  In the BN17 mode, this is usually not used.

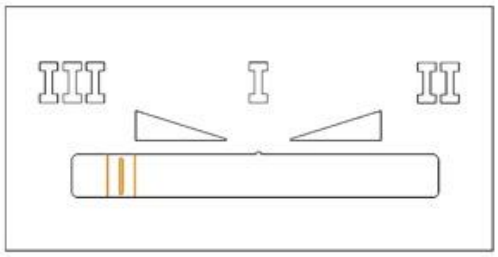

Shutter on the left
maximum pre-drying air

- Less reactive fuel – maximum pre-drying air
  In the BN25 and BN40 models, the usual position for large pieces of fuel and softwood (spruce).
  In the BN17 model, the usual position for standard firewood.

6.7 Control of the circulation pump

The regulator controls (powers) the circulation pump (230V), connected in the circuit "boiler – accumulation tank" or, in the setup without an accumulation tank, the heating system pump. The switching temperature is factory-set in the regulator to 60 °C; if necessary, it can be adjusted to a different value (service technician).

6.8 Boiler cleaning

The removal of ash from the boiler is carried out either when cold or after turning off the boiler, detecting the fuel before subsequent refuelling. Regular cleaning of the boiler will achieve higher efficiency and thus lower fuel consumption. For more comfortable cleaning, an ash vacuum cleaner can be used. Ash must be stored in non-combustible containers with lids. When cleaning, we recommend having the exhaust fan turned on.
The standard equipment of the boiler includes the following cleaning tools:

1.	2.
Rake	**Hook**
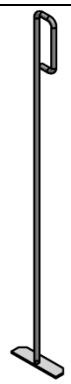	

Tube heat exchanger:
The boiler is standardly equipped with mechanical turbulators, which are used for cleaning the rear flue gas exchanger. Clean after each loading and closing of the loading doors by moving the turbulator lever. Always move the turbulator levers to both extreme positions. Leave the lever in the lower position (unless it descends on its own due to the weight of the turbulators). Clean the heat exchanger using the lever after each loading.
Improper combustion leads to excessive fouling of the heat exchanger and there is a risk of blockage (solidification) of the turbulator. It can be very laborious to restore operation. It requires opening the heat exchanger cover, removing the movable comb body, pulling out the individual turbulators, cleaning them, and then reassembling them.
If the turbulators are moving stiffly and the lever movement is laborious, it is evidence of poor combustion. The usual cause is operator error, see chapter 6.11.

Loading chamber:

At least once a week, it is necessary to check whether an excessive layer of ash has accumulated at the bottom of the loading chamber. This is particularly risky with fuel that has a high proportion of bark or impurities of waste material. Excessive ash build-up can restrict the lower openings of the primary air supply (just above the funnel bottom) and thus affect the proper operation of the boiler.

If the accumulation of ash exceeds 2cm in the loading chamber, it must be broken up with a rake and pushed into the combustion chamber. In the case of more ash-forming fuels, we recommend turning off the stable ember level function as needed (e.g., once a week), allowing the fuel to burn out completely, and removing the ash deposits from the bottom of the loading chamber.

The slightly roughened surface of the tiles (up to 5mm) caused by small ash deposits is not a defect.

There is no need to clean the side walls, the hinged smoke screen and the loading door. The possible accumulation (of soot and dry tar) is not a drawback. Check whether the intake openings for the pre-drying air in the upper part of the loading chamber's front wall are blocked.

Regular cleaning and maintenance of the boiler is essential to maintain its long lifespan. If the boiler is not cleaned regularly and properly, there is an increased thermal stress on all parts and there is a risk of damage. The warranty does not cover damage caused by neglected maintenance of the boiler!

Lower combustion chamber:

Cleaning of the combustion chamber is carried out through the lower door using cleaning tools "Rake" and "Hook". Every 2 weeks, it is essential to remove the heat exchanger plug (see Boiler schematic, item 41) and clean the bottom of the combustion chamber including the space under the heat exchanger.

Procedure for cleaning the lower combustion chamber of the BN PLUS 17 boiler:

- Remove 2 upper pieces of the part "tile slab" (see boiler schematic, item 59).
- Using a rake, remove (scrape) deposits from the side walls and the upper rear wall of the combustion chamber.
- Using a hook, remove the deposits (scrape) from the lower rear wall under the heat exchanger (behind the ceramic tiles of the tile – labyrinth).
- For ceramic tiles in the combustion chamber and doors higher than 1 cm, scrape with a rake.
- If clogged, clean the opening and the sight glass.
- Using a rake, remove (pull out) the scraped impurities from the bottom of the combustion chamber.
- Subsequently return the 2 upper pieces of the part "tile slab" (see Boiler schematic, item 59) to the original place in the combustion chamber.

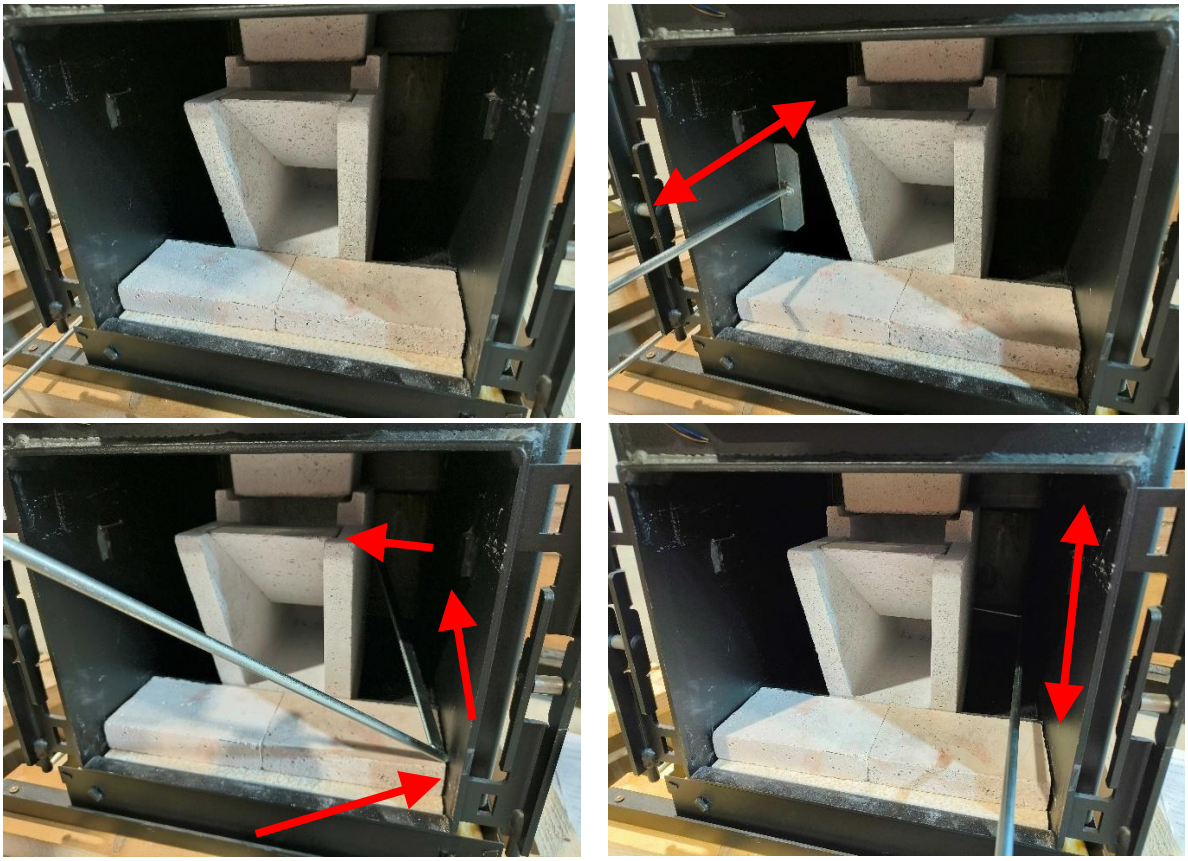

The composition of wood ash depends on the fuel used. Ash must be handled or disposed of in accordance with applicable local requirements. Where permitted and where its composition is suitable, it may be used as a fertiliser. Any cinder residues can be separated using a sieve and added along with the fuel to the boiler.

Procedure for cleaning the lower combustion chamber of the BN PLUS 25 and BN PLUS 40 boilers:

- Remove the plug from the heat exchanger.
- Using a rake, remove (scrape off) deposits from the side walls of the combustion chamber above the tiles and above the lower door (from the metal walls of the boiler body).
- Then, using a hook, clean (scrape) the space behind the rear tiles (when cleaning, it is necessary to press the hook's strip back against the metal wall of the body and move the hook sideways).
- Carefully rake any deposits on the ceramic tiles of the combustion chamber and the door insulation greater than 1 cm.
- If clogged, clean the opening and the sight glass.
- Use a rake to remove the deposits from the area under the heat exchanger and from the bottom of the combustion chamber.
- Place the heat exchanger plug back in its original position.

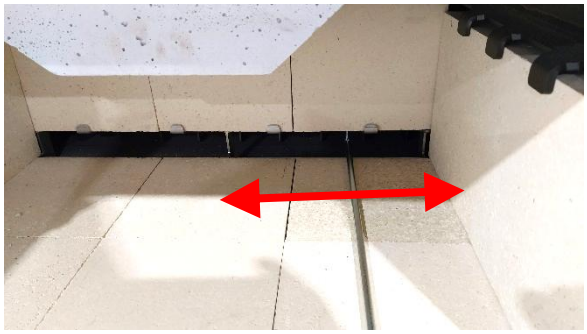

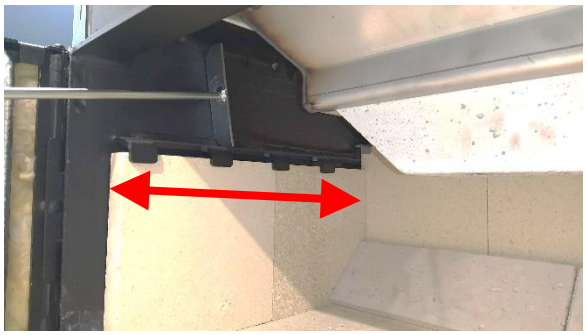

Link to video – Cleaning of the combustion chamber:

Exhaust fan:

The cleaning of the exhaust fan should be carried out at least once a year or in case of increased noise. Cleaning is carried out with a spatula and a wire brush.

Procedure for cleaning the exhaust fan:

- Disconnect the supply cable from the exhaust fan.
- Unscrew the 4 nuts and remove both flanges (semi-circles) of the exhaust fan.
- Remove the motor with the propeller from the body of the exhaust fan.
- Scrape off the deposits from the inner walls of the exhaust fan.
- Remove (vacuum) the loose ash and deposits from the body of the exhaust fan.
- Remove the propeller from the exhaust fan motor. **WARNING! The propeller blade of the fan has a left-hand thread!**
- Carefully clean the fan blades and the motor flange with a wire brush and a spatula.
- Reassemble the exhaust fan in the reverse order.

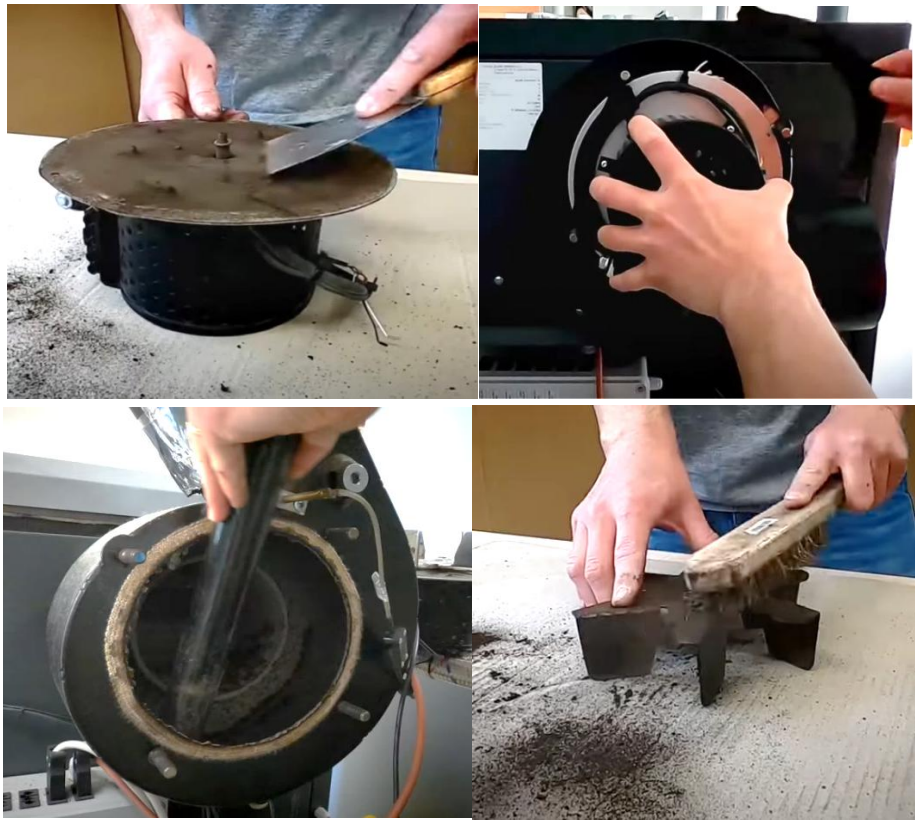

Link to video – Cleaning of the exhaust fan:

It is recommended to replace the start capacitor on the exhaust fan once a year. Only an authorized person (service technician) may perform this replacement. The boiler must be disconnected from the mains power supply at that time!

Regular cleaning and maintenance of the boiler is essential to maintain its long lifespan. If the boiler is not cleaned regularly and properly, there is an increased thermal stress on all parts and there is a risk of damage. The warranty does not cover damage caused by neglected maintenance of the boiler!

The composition of wood ash depends on the fuel used. Ash must be handled or disposed of in accordance with applicable local requirements. Where permitted and where its composition is suitable, it may be used as a fertiliser. Any cinder residues can be separated using a sieve and added along with the fuel to the boiler.

6.9 Taking the boiler out of service

When taking the boiler out of operation for an extended period, we recommend cleaning its heat exchange surfaces and removing ash from the boiler (see chapter 6.8).
Once per heating season, we recommend removing all tiles from the lower combustion chamber (except for the central labyrinth tile of the BN17), cleaning the walls of the boiler, and sweeping out the ash. When reassembling, we recommend turning all tiles so that they are exposed to heat on the opposite side. Their lifespan will be extended.

6.10 Operational checks and maintenance

Boiler and heating system
The owner is obliged to continuously monitor the equipment and ensure its necessary maintenance. No special qualifications are required for this activity; training during the commissioning of the boiler will suffice.
It is necessary for the boiler to be periodically checked by the operator during operation. It is especially important to monitor that the temperature of the outlet water does not exceed 95 °C. Additionally, it is necessary to check the amount (pressure) of water in the system.
It is necessary to continuously check the condition of the ceramic tiles and the sealing of both doors.

Chimney and flue pipes
It is necessary to check the tightness and sooting of the flue pipe and the clearance of the chimney flue. During operation and cleaning, a layer of ash accumulates in the chimney. It is necessary to remove it through the chimney door in such a way that the chimney flue does not become blocked (at least once per season).
The leakage of joints in the flue pipe and chimney door can be eliminated with sealant or aluminium tape.

Door tightness
Regularly check the tightness of the door. The edges of the loading openings must be slightly pressed into the sealing cord. Sealing is carried out by replacing the sealing cord. The tightness (correctness of seating) is recognized by the smoothly imprinted edge of the sealing surface of the boiler body in the cord. If it is rough and covered with a deposit of soot and tar, it indicates a leak. This is particularly the case with the inner sealing cord of the loading door.

6.11 Poor combustion, frequent operator errors

Poor combustion is manifested by foul-smelling smoke, excessive fouling of the flue gas exchanger or possibly the flue pipe, lower output, and increased fuel consumption. The cause is usually improper operation, e.g.:

- **Incorrect ignition in a clean boiler:** We recommend filling the funnel with pieces of fuel (well-dried, ideally hard) so that after ignition and closing the door, the flame remains stable. The flame may weaken, but it must not flicker or go out.
- **Inappropriate fuel:** Large logs and significant gaps between them, excessive moisture in the fuel. In particular, softwood ignites more poorly and requires to be dry, split (up to about 15 cm). Too long pieces may get stuck in the loading chamber. For the BLAZE NATURAL PLUS 17, fuel should not be longer than 27 cm. For the BLAZE NATURAL PLUS 25, fuel should not be longer than 35 cm. For the BLAZE NATURAL PLUS 40, fuel should not be longer than 52 cm. Do not place large pieces of wood on the bottom of the loading chamber, as they will not break down in time and will get stuck above the funnel. Do not place large pieces on top of the load, as they will not have time to create a stable ember level and will smoulder after being removed. We recommend arranging irregular pieces with minimal gaps between them.
- **Incorrect setting of secondary air:** Softwood during combustion usually requires pre-drying air. Hardwood requires more secondary air.
- **Insufficient fuel supply:** We always recommend a full load of fuel. A half dose burns briefly and struggles to create a quality stable ember level.
- **Operation with a clogged boiler:** Excessive amounts of ash in the combustion chamber and the flue gas exchanger are undesirable. It is necessary to regularly clean the metal walls of the flue gas pathways and the combustion chamber – see chapter 6.8.
- **Fuel supply in a state where the required heat consumption is not ensured:** The building, or possibly the accumulation tank, does not absorb heat from the fuel charge and will result in the shutdown with smouldering fuel. Before refuelling, it is necessary to determine the free capacity of the tank (e.g. the limit temperature in freezing temperatures is approximately 60 °C, at outdoor temperatures above 0 °C approximately 50 °C).
- **Inappropriate intervention in boiler operation:** Turning off the boiler before the fuel burns out to the stable ember level.

7 Troubleshooting

7.1 Boiler overheating

If the water temperature in the boiler **exceeds approximately 95 °C**, the regulator will shut down the boiler, i.e., turn off the exhaust fan and close the air valves.

If the water temperature in the boiler **exceeds approximately 98 °C**, the independent emergency thermostat (STB) will switch off the power to the exhaust fan. To restart the boiler, it is necessary to unscrew the cover of the STB emergency thermostat button (see Boiler schematic, item. 58) and press the thermostat button STB with a thin object. The emergency thermostat cannot be activated until the temperature in the boiler drops below approximately 70 °C.

7.2 Power outage during operation

In the event of a power outage during the operation of the boiler, the exhaust fan will shut down, the valves will close, and the combustion will be interrupted. The hot fuel layer and the lining release heat for approximately 1

hour. To prevent overheating of the boiler, this residual heat must be reliably dissipated – see chapters 5.10.7 and 5.10.8.

The amount of residual heat is approximately 5–10 MJ depending on the current output and the fuel burn-up.

7.3 Operation of the boiler without electricity

The BLAZE NATURAL PLUS boiler can operate without electricity. The boiler must be started in the standard way using the exhaust fan.

The boiler is capable of emergency operation using only the chimney draft.

If the boiler connection allows for sufficient gravity circulation, it is possible to operate the boiler on chimney draught by manually opening the valves with a suitable object (similarly to checking the functionality of the valves – see chapter 6.2). This prevents the boiler from being clogged with smouldering unburned fuel during an emergency shutdown, or prevents the building from cooling down excessively.

In the event that you operate the boiler without electricity and the output, or rather the chimney draft, is insufficient, the turbulators can be removed from the boiler's heat exchanger. This will increase the temperature of the flue gases and will also lead to an increase in chimney draft. It is also possible to remove the lower cover of the space under the heat exchanger.

At a chimney draft of 10 Pa, the boiler operates at 30% output; at a draft of 20 Pa, the output is approximately 75%.

The boiler operated in this way must be under constant supervision. It is necessary to ensure (by loading, closing the combustion air openings) that the water temperature in the boiler does not exceed 95 °C.

7.4 Further troubleshooting

Fault	Cause	Removal
Electronic regulator is not working (the switch does not light up).	Boiler overheating and disconnection of the emergency thermostat STB.	After the water temperature in the boiler drops below approximately 80 °C, unscrew the cover of the emergency thermostat and press the button with a suitable object (e.g. a pencil).
	Burnt internal fuse in the regulator.	Replace the fuse (service technician, qualified electrician).
	Loose or disconnected plug of the supply cable, damaged wire.	Check the power supply, electric plug, cable, replace any damaged part (service technician, qualified electrician).
	Damaged regulator.	Replace the regulator (service technician, qualified electrician).

Fault	Cause	Removal
The circulation pump is not working.	The boiler did not reach the set switching temperature. Interrupted wire to the pump Disconnected connector of the wire to the pump Damaged mechanical regulator Stuck pump	Wait, change settings (service technician) Wire repair (service technician) Connect the connector (operator) Tap on the pump body (operator) or commissioning (service technician).
It is not possible to move the turbulator lever.	Poor combustion, irregular use of turbulators. Frequent boiler shutdowns with larger amounts of fuel (overheating).	Open the door, remove the plug from the heat exchanger. Commercially available products that dissolve tar can be used for release. It is also possible to disassemble the carrier and move the turbulators individually.
The exhaust fan is not turning.	Boiler overheating and disconnection of the emergency thermostat STB. Stuck air valves cause the end switch to engage. Stuck fan impeller. Burnt fuse of the regulator. Non-functional motor. Damaged regulator.	After the water temperature in the boiler drops below approximately 80 °C, unscrew the cover of the emergency thermostat and press the button with a suitable object (e.g. a pencil). Unstick the valves according to chapter 6.2. Remove the cause (foreign body, blockage). Replace the fuse (service technician, qualified electrician). Replace the motor (service technician, qualified electrician). Replace the regulator (service technician, qualified electrician).
There is no stable ember level in the boiler.	Leaky valves on air inlets. The regulator did not receive a signal from the stable ember level function (the exhaust fan continues to operate even when the detection arm is deviated, and the red LED on the inductive sensor under the front cover of the boiler does not light up). The detection arm did not deviate due to its immobilisation by a layer of tar. The cause may be frequent boiler shutdowns with a larger amount of fuel (overheating). The detection arm is otherwise damaged, e.g. a loose mounting screw of the body of the support, etc.	Remove the air distribution panel, adjust the valves (service technician). Identify the cause of the failure to mechanically engage the switch, e.g. a faulty switch, a broken wire. Remove the fault (qualified electrician, service technician). Remove the air distribution panel and rectify the fault. Remove the air distribution panel and rectify the fault.
The exhaust fan is making excessive noise.	The impeller is fouled with tar. The cause may be frequent boiler shutdowns with a larger amount of fuel (overheating).	Remove the exhaust fan motor. Clear, remove the cause of clogging.

Fault	Cause	Removal
Flashing indicator light (small green).	Overheated – PAUSE …Insufficient heat consumption (air in the system, non-functioning pump, closed valve, heated accumulation tank, closed radiators,…).	Identify and remove the cause, ensure heat consumption.
Flashing indicator light 2x (small green).	Water temperature sensor failure.	Contact the service technician.
Flashing indicator light 3x (small green).	Flue gas temperature sensor failure.	Contact the service technician.
Flashing indicator light 4x	Regulator failure	Contact the service technician.

Always disconnect the boiler from the mains power supply first when troubleshooting! If the boiler unit also controls a backup heat source, it is essential to disconnect it from the mains power supply as well.

In the interest of maintaining quality function and safe operation, it is necessary for boiler repairs to be carried out **exclusively by personnel from professional service centres**.

Warranty and post-warranty repairs of boilers are provided by BLAZE HARMONY s.r.o. through its **professional service centres and contractual partners**.

8 Further information

8.1 Properties of different types of fuels

We do not recommend burning wet wood. Combustion of unseasoned wood reduces its effective calorific value, which is reflected in increased fuel consumption. Moreover, the combustion of wet wood increases the water vapour content in the flue gases, thereby raising their dew point. This may manifest as condensation of moisture and a reduction in the lifespan of the boiler, or possibly the chimney structure. The proper natural drying of wood occurs for softwood in split logs after two years, and for hardwood after three years.

The calorific value of all types of wood is approximately the same, around 15 MJ/kg at 15% moisture content. Hardwood (with a high density) is more suitable if you want to achieve a longer burning time.
Typical density of basic types of wood in kg/m^3 (solid cubic metre) at 15% moisture:

acacia	750	hornbeam	680	alder	520
pine	500	ash	670	spruce	450
birch	630	maple	660	poplar	450
beech	670	linden	490	willow	440
oak	690	larch	590		

The specific weight of wood arranged in woodpiles (stacked cubic metre) is 60–80% of the specific weight of the wood itself (solid cubic metre).

8.2 Fuel consumption, refuelling frequency

The fuel consumption for the season is determined by many factors:

- thermal loss of the building (the output required to heat the building at approximately -15 °C)
- efficiency of boiler operation (fuel quality, operator level and output regulation)

- the location of the boiler room (whether the heat from the surface of the boiler and chimney contributes to heating the building)
- the temperature to which the building is heated (an increase in temperature in the building by 1 °C corresponds to an increase in fuel consumption of approximately 5%)
- if the boiler is used for heating domestic hot water, what is its consumption
- the average outdoor temperature value during the heating period (differences may be ±20%)
- if the entire building is heated or just a part, what is the heat loss due to ventilation, etc.

The typical consumption for a season for a family house with a heat loss of 15 kW is approximately 10,000 kg of dry wood, which is about 30 m3 (stacked cubic metres).

The daily consumption is proportional to the outdoor temperature. An example of the typical representation of daily consumption for a family house with a heat loss of 15 kW during the heating season with the BLAZE NATURAL PLUS 25 boiler:

number of days	outdoor temperature	average boiler output	daily fuel consumption	number of loads per day
5 days	-8 °C	55%	75 kg	3x
30 days	-5 °C	45%	60 kg	2-3x
30 days	-2 °C	40%	50 kg	2x
70 days	2 °C	30%	45 kg	2x
50 days	6 °C	20%	40 kg	1-2x
50 days	10 °C	10%	20 kg	1x

8.3 Thermal loss of a building, methods of its determination

- The thermal loss is a parameter defined by a standard. It corresponds to the thermal output required to heat the building to the specified temperature (21 °C for living spaces) at a standardised calculated outdoor temperature. In the Czech Republic, this temperature ranges from -17 °C to -12 °C, depending on the location of the building (lowland, highland).
- The value of thermal loss must be correctly determined based on the parameters of the building (area, wall thickness, wall material, type of windows, outdoor calculation temperature, etc.). Have the calculation performed by the designer or use a publicly available application, for example: https://www.tzb-info.cz/tabulky-a-vypocty/107-vypocet-tepelne-ztraty-objektu-dle-csn-06-021.
- The heat loss can be approximately determined from the built-up area of the building. In a typical non-insulated family house in the temperature zone of the Czech Republic, the heat loss is approximately 40 W per 1m^3, while in an insulated house it is about 20 W per 1m^3.
- The heat loss can also be roughly determined from the consumption of the existing fuel for the season:

Consumption of various types of fuels for a **1kW** thermal loss of the building.

Fuel	Considered overall efficiency	Season consumption
Dry wood	70%	650 kg (1.5 - 2 m^3)
Wood briquettes	70%	600 kg
Wood pellets (automatic boiler)	77%	550 kg
Coal (boiler with manual loading)	70%	600 kg
Coal (automatic boiler)	77%	550 kg
Gas	85%	260 m^3 (2,400 kWh)
Propane	85%	185 kg
Electricity	100%	2,000 kWh
District heating	100%	2,000 kWh (7,200 MJ = 7.2 GJ)

9 Safety Instructions

Only devices that have been installed and put into operation according to the documentation, and which are in an appropriate technical condition, may be operated.

When transporting the product to its destination, it is necessary to observe safety regulations. For transportation, use aids and transport devices specifically designed for this purpose with appropriate load capacity (the weight of the product is stated in chapter 2).

The inspection of flue gas paths and chimneys must be carried out in accordance with applicable regulations. The flue pipe must be safely connected to the chimney flue. Flue pipes must be mechanically strong, tight against the penetration of flue gases, and cleanable. The condition of the chimney should be checked regularly. The cleaning opening in the chimney must be properly sealed to prevent smoke blown by the exhaust fan from leaking into the surrounding area. Only one boiler can be connected to a single chimney flue. The connection of the appliance to the chimney flue must always be carried out with the consent of the relevant chimney sweep guild. Flue pipes must not be routed through utility or residential spaces. The internal cross-section of the flue pipe must not be larger than the internal diameter of the flue and must not narrow towards the flue.

Except for approved liquid fire starters, the use of flammable liquids (gasoline, oil, etc.) for lighting fires is prohibited.

Troubleshooting on the boiler can only be carried out on a cooled-down boiler that is disconnected from the electrical network.

Interventions in the boiler and the electrical connections of the boiler are prohibited!

The boiler can only be connected to a suitable 230V/50Hz socket or to a switchboard. After installation, the network socket or switchboard must be accessible without restrictions.

There must be sufficient lighting in the boiler room.

Only a qualified professional may intervene in the electrical part of the boiler.

Installation and operation of the boiler (boiler room) must comply with the relevant project, safety, and hygiene regulations.

The operation of the boilers must follow the installation, assembly, and operation instructions.

The boiler operator must be a person over 18 years old who is familiar with the manual and the operation of the appliance. It is unacceptable to leave children unattended nea a boiler that is in operation. The boiler must be under occasional supervision by the operator during operation.

For all activities related to boiler operation, it is necessary to use protective gloves and safety goggles.

Do not place flammable materials near the boiler and the loading and ash removal openings. Ash must be disposed of in non-combustible containers with a lid. Always pay due attention to the fact that the outer surfaces of the boiler may be hot to the touch.

If there is a risk of flammable vapours or gases entering the boiler room or during work that poses a temporary risk of fire or explosion (such as laying floor coverings or painting with flammable paints), the boiler must be taken out of operation in good time before the work begins.

The owner is required to carry out a boiler inspection and safety equipment check at least once a year and verify functionality according to local operating conditions. In the case of connecting the boiler to a dedicated pressure device (e.g. an expansion vessel), the owner is obliged to ensure inspections according to applicable regulations.

WARNING! The boiler may only be used for the purposes for which it is intended.

10 Disposal of transport packaging

- dispose of the polyethylene cover film in a recycling bin for plastics
- disassemble the wooden transport pallet and burn it

11 Disposal of the boiler after the end of its lifespan

- clean the boiler and disassemble it into individual parts
- metal parts to be delivered to a metal waste collection point
- ceramic tiles should be disposed of as household waste or can be used as building material
- insulation boards and sealing cords should be disposed of as household waste

12 Related standards

Heating system

EN 303-5+A1:2023	Heating boilers

Fire regulations

EN 13501-1	Fire classification of construction products and building elements

Electrical

EN 60445 ed. 2	Basic and safety principles for man-machine interface, marking and identification – Identification of equipment terminals and of terminations of certain designated conductors, including general rules for an alphanumeric system
EN 60079-14-2	Electrical apparatus for explosive gas atmospheres – Part 14
EN 60 446	Basic and safety principles for man-machine interface, marking and identification - Identification of conductors by colours or numerals
EN 50 165	Electrical equipment of non-electric appliances for household. Safety requirements
EN 55 014-1	Electromagnetic compatibility – Requirements for household appliances – Part 1
EN 60335-1 ed.2 2003+1:2004+A11:2004+A1:2005+2:2006+A12:2006+a2:2007+ 3:2007+ Z1:2007	Household and similar electrical appliances – Safety – Part 1: General requirements
EN 60335-2-102	Household and similar electrical appliances – Safety – Part 2

13 Warranty conditions

The BLAZE NATURAL PLUS boilers are manufactured and tested according to the applicable documentation and comply with EN303-5+A1:2023 Heating boilers.

The warranty period for the pressure part of the boiler is 84 months.
The warranty period for consumable parts is 12 months.
The warranty period for other components is 24 months.
The warranty starts from the date of the first commissioning of the boiler, but no later than 6 months after the date of dispatch of the boiler from the manufacturing plant of BLAZE HARMONY s.r.o.

The warranty applies only to the boiler that is operated according to the instructions provided in the installation, operation, and maintenance manual and started by an authorized company.
Consumable parts are considered to be ceramic tiles, sealing cords, and parts made of heat-resistant steel in the lower combustion chamber.

In the event of the need to replace a defective boiler part under warranty, the end user shall contact the authorised service organisation that commissioned the boiler, or another company in their area with a valid authorisation to commission and service boilers from BLAZE HARMONY s.r.o. The latter will ask the service department of BLAZE HARMONY s.r.o. for a new spare part. If the service department of BLAZE HARMONY s.r.o. considers that the complaint is justified, it will immediately send the spare part in question to the service organisation. The latter will then replace the part on the customer's boiler.

The warranty does not cover, among other things, faults arising from:

- connecting the boiler to a water pressure greater than 300 kPa
- using fuel other than the recommended fuel
- improper operation (e.g. frequent shutdowns and overheating of the boiler)
- connecting the boiler to a network other than 230V/50Hz or to a faulty network
- untreated water (e.g. sedimentary limescale in the boiler)
- inexpert handling and mechanical damage to parts
- incorrectly sized and improperly executed heating system
- violent treatment, intervention in the boiler structure, natural disaster, improper storage or for other reasons not influenced by the manufacturer

Failure to comply with the above will result in the loss of warranty.
In the event of a warranty claim, please contact the service and installation organisation that put your product into operation.
If the first commissioning of the boiler is carried out by an unauthorised person, the warranty on the product is void!

Immediately send a properly completed and signed document "**Warranty Card and Boiler Commissioning Checklist and Heating Test Report"** to the manufacturer after the boiler is put into operation. Without fulfilling this condition, the manufacturer cannot acknowledge the repair as warranty.
When reporting a fault, it is necessary to report:

- the boiler serial number
- the installation date
- the authorised company that put the boiler into operation
- the circumstances of the fault (description of the fault)

The manufacturer reserves the right to make changes as part of product innovation that may not be included in the manual.

14 WARNING!

A properly completed warranty card intended for the manufacturer of the BLAZE NATURAL PLUS boiler should be sent promptly to the address below:

BLAZE HARMONY s.r.o.
Trnávka 37
751 31 Lipník nad Bečvou
Czech Republic

Or by e-mail to zarucak@blazeharmony.com

15 Record of repairs performed

Record of warranty and post-warranty repairs and product inspections			
Record date	**Performed activity**	**Contractual service organization (signature, stamp)**	**Customer signature**

BLAZE HARMONY s.r.o.
Trnávka 37, 751 31 Lipník nad Bečvou
Czech Republic
E-mail: info@blazeharmony.com, www.blazeharmony.com

Date of last revision: 2026-09-18