INSTRUCTION MANUAL FOR THE OPERATION AND INSTALLATION OF GASIFICATION BOILERS

BLAZE PRAKTIK COMBI 25

BLAZE PRAKTIK COMBI 40

BLAZE HARMONY s.r.o.

Trnávka 37, 751 31 Lipník nad Bečvou

Czech Republic

E-mail: info@blazeharmony.com, www.blazeharmony.com

Dear customer,

Congratulations on your choice and purchase of the BLAZE PRAKTIK COMBI boiler. You are becoming a user of a boiler with top parameters. To ensure that the boiler serves you well, reliably, and for a long time, operate it in accordance with the instructions in the manual, paying particular attention to chapters 6, 7, and 8.

We greatly appreciate your trust and would welcome feedback on the operation and use of the boiler.

Copyright 2017 BLAZE HARMONY s.r.o.

All rights reserved.

All text and images are subject to copyright and other intellectual property protections.

Printing errors reserved.

Contents

1 Advantages and applications of the boiler 6
1.1 Advantages of the boiler 6
1.2 Use of the boiler 7
1.3 Use and advantages of the pellet burner 7
1.4 Advantages and disadvantages of operation without an accumulation tank 8
1.5 Conditions for operating the boiler without an accumulation tank when the all-season fuel is bulk wood 8
1.6 General conditions for connection and operation (with and without an accumulation tank) 9
2 Technical specifications of the boiler 11
3 Prescribed fuels for the boiler 12
4 Boiler description 13
4.1 Boiler design 13
4.2 Description of function – wood burning 14
4.3 Description of function – pellet burning 14
4.4 Burner schematic 16
4.5 Boiler dimensions 17
4.6 Boiler schematic 19
5 Boiler assembly and installation 23
5.1 Checking the quality and completeness 23
5.2 Removing parts of the boiler before relocation to the boiler room 23
5.3 Disassembly of the transport pallet 25
5.4 Handling the boiler 26
5.5 Placing the boiler in the boiler room 27
5.6 Switching the lower door 28
5.7 Installation of the exhaust fan 28
5.8 Installation and operation of the lambda sensor 29
5.9 Connection to the chimney 30
5.10 Supplying air to the boiler 30
5.11 Installation of the pellet burner 31
5.12 Heating system design, connection of the boiler 34
5.12.1 Integrated-mixing system 34
5.12.2 Installation of the integrated-mixing thermostat 35
5.12.3 Size of the accumulation tank 35
5.12.4 Connection “boiler – accumulation tank” with gravity circulation (without pump) 36
5.12.5 Connection “boiler – accumulation tank” with forced circulation (with pump) 37
5.12.6 Residual boiler output 37
5.12.7 The most suitable method for dissipating residual heat 37
5.12.8 Other methods of dissipating residual heat 37
5.12.9 Water 38

5.12.10 Open expansion vessel ... 38
5.12.11 Connection of the boiler to an existing system ... 38
5.12.12 Connection of the boiler with an accumulation tank ... 38
5.12.13 Connection of the boiler without an accumulation tank ... 39
5.12.14 Condition of non-disconnection of the system ... 39
5.12.15 Gravity circulation valve BLAZE HARMONY ... 39
5.13 Hydraulic connection diagrams ... 42
5.13.1 Connection diagram 1 – gravity circulation setup ... 42
5.13.2 Connection diagram 2 – combined setup with a pump in a bypass with an injector ... 43
5.13.3 Connection diagram 3 – forced setup with gravity circulation cooling into the heating system ... 44
5.13.4 Connection diagram 4 – forced setup with gravity circulation cooling into the DHW tank ... 45
5.13.5 Connection diagram 5 – forced setup with emergency cooling ... 46
5.13.6 Connection diagram 6 – forced setup with a thermostatic mixing valve and emergency cooling ... 47
5.13.7 Connection diagram 7 – gravity circulation setup with an accumulation tank ... 48
5.13.8 Connection diagram 8 – combined setup with an accumulation tank with an injector ... 49
5.13.9 Connection diagram 9 – forced setup with an accumulation tank ... 50
5.13.10 Connection diagram 10 – forced setup with a thermostatic mixing valve, accumulation tank and emergency cooling ... 51
5.14 Connection of automatic cooling ... 52
5.15 Electric connection ... 52
5.16 Burner settings before first start-up ... 52
5.16.1 Filling the fuel feeder with pellets ... 52
5.16.2 Fuel feeder calibration ... 53
5.16.3 Fan performance settings ... 53
6 Boiler operation by the user ... 54
6.1 First commissioning ... 54
6.2 Ignition ... 54
6.3 Refuelling ... 56
6.4 Amount of loaded fuel, refuelling intervals ... 57
6.5 Setting the desired boiler output ... 58
6.6 Automatic stable ember level function ... 58
6.7 Combustion control by the lambda sensor ... 59
6.8 Boiler cleaning ... 59
6.9 Burner cleaning ... 64
6.10 Taking the boiler out of service ... 64
6.11 Operational checks and maintenance ... 64
6.12 Poor combustion, frequent operator errors ... 65
7 Troubleshooting ... 66

7.1 Boiler overheating 66
7.2 Power outage during operation 66
7.3 Fault in controlling the amount of oxygen in flue gases 67
7.4 Operation of the boiler without electricity 68
7.5 Further troubleshooting 69
8 Burner service and maintenance 71
8.1 Cleaning the optical sensor 72
8.2 Ignition coil replacement 72
9 Further information 73
9.1 Properties of different types of fuels 73
9.2 Fuel consumption, refuelling frequency 73
9.3 Thermal loss of a building, methods of its determination 74
10 Safety instructions 74
11 Disposal of transport packaging 76
12 Disposal of the boiler after the end of its lifespan 76
13 Related standards 76
14 Warranty conditions 77
15 WARNING! 78
16 Record of repairs performed 79

1 Advantages and applications of the boiler

1.1 Advantages of the boiler

Low investment costs

- The boiler contains a **patented integrated-mixing system,** which replaces the standard return water protection for the boiler (return line), and a mixing circuit with temperature regulation (e.g. of the Laddomat type) is not necessary.
- The boiler can be connected to the accumulation tank using a gravity circulation setup. This setup does not require a pump and an emergency cooling system.
- Excellent adjustability of output and long-term maintenance of a stable ember level allow achieving the same temperature and service comfort even with an accumulation tank of half the volume required for boilers without adjustability.

Low operating costs

- The automatic stable ember level function and lambda sensor regulate the combustion process according to the operating conditions. Efficiency is also increased by low flue gas temperature and good insulation.
- Electricity savings in a gravity circulation setup (without pump and electric mixing valves).
- Cost savings on servicing and maintenance – progressive conceptual elements (e.g. split heat-resistant tiles made from high-quality ceramics) ensure low costs for the user on wear-and-tear parts.

Quality combustion

- The **patented radial nozzle** and **patented 3-zone air system** enable efficient combustion of dimensionally diverse fuels.
- The lambda sensor ensures the optimal residual oxygen level in the flue gases, enabling ideal combustion.
- The boiler has a unique design of the loading chamber with a compact insulating shell. Therefore, there is no excessive cooling of the fuel, and the combustion is of high quality even at low power and with fuels that have a higher moisture content.
- The regulator evaluates the instantaneous performance (from the temperature of the flue gases and water) and maintains it in the area of high-quality combustion.

Long lifespan

- During the gasification of wood, organic acids (acetic acid, etc.) are produced. In conventional boilers (made of steel sheets or cast iron), these acids condense on the walls of the loading chamber and cause chemical corrosion, which significantly shortens the lifespan. The compact insulating shell of the loading chamber completely eliminates this problem; the walls of the shell have a higher temperature, thus preventing condensation. The lifespan of boilers of this design is significantly higher than that of wood boilers without similar protection.
- The integrated water mixing system ensures that the water temperature in the boiler during operation is higher than the dew point of the flue gases (approximately 50°C). This protects the internal heat exchange surfaces of the flue gases from low-temperature corrosion.
- The lambda sensor extends the boiler's lifespan (as the quality of combustion improves, the amount of corrosive substances in the flue gases decreases).

Service comfort

- **The patented detection of stable ember layer** accurately and reliably evaluates when the optimal layer of residual fuel is for switching to stable ember level shutdown. This ensures maximum time for refuelling without the need for fresh ignition. If the fire goes out even then, an ideal layer of charcoal remains in the boiler, which only needs to be lit (for example, with a piece of paper) before adding more fuel. The necessity of regular lighting (i.e. removing ash from the loading chamber and lighting using shavings) is thus completely eliminated in operation.
- Thanks to the Lambda sensor, the operator does not have to adjust the air ratio, and the fouling of the boiler and chimney is also reduced.
- The sophisticated regulator controls the heating system, hot water heating, etc. It allows remote access (internet), and more.

- No need to remove ash from the bottom of the loading chamber. The ash continuously slides into the combustion chamber.
- Horizontal loading doors facilitate operation and allow for easy loading of loose fuels.
- Due to efficient combustion, it is usually sufficient to remove ash every 1 to 2 weeks of operation.
- Mechanical turbulators allow for easy and time-efficient cleaning of the heat exchanger using a lever.
- The exhaust fan prevents smoke from entering the boiler room during loading and ignition, and reduces dust when removing ash and cleaning the boiler.
- The insulating shell of the loading chamber ensures a higher wall temperature, preventing the accumulation of liquid tar on the walls.
- The sight window with ceramic glass allows the operator to easily check the state of combustion.
- The boiler is capable of emergency operation even during a power outage, relying solely on the chimney draft (see section 7.4).

1.2 Use of the boiler

Hot-water combined boilers for wood and wood pellets BLAZE PRAKTIK COMBI are designed for heating family houses, apartments, cottages, office buildings, small businesses, and other premises where partially unattended operation is required. The BLAZE PRAKTIK COMBI boilers are officially approved (certified) for installations and operation without an accumulation tank (they meet the requirement of the EN 303-5 standard for adjustable output from 30 to 100%). The connection without an accumulation tank is only possible in an installation with corresponding heat consumption (see chapters 1.5 and 1.6).

If operated under installation conditions that do not comply with the requirements for connection and operation stated in this document, the warranty on the boiler is void.

The BLAZE PRAKTIK COMBI boilers are manufactured and tested according to the applicable documentation and comply with EN303-5+A1:2023 Heating boilers.

1.3 Use and advantages of the pellet burner

- The rotary burner is designed for the combustion of solid fuels in the form of pellets of various quality and size (according to the specification in chapter 3).
- The burner operates automatically and requires no supervision. The burner is activated automatically based on the parameters set in the control unit.
- The principle of the rotary burner minimises slag sticking (baking) to the inner walls of the burner. By cyclic rotation, the slag gradually moves and then falls out of the burner into the lower combustion chamber of the boiler. Minimizing slag adhesion significantly extends burner lifespan.
- Combusted fuel is aerated along the entire length of the combustion chamber and mixed by the rotation of the burner, supporting stable combustion.
- The electrical power consumption of the boiler and burner is specified in Table 3.
- The burner is controlled by the most advanced control unit, which ensures optimal fuel dosing according to user requirements and smooth power regulation.
- The burner is equipped with a safety device that cuts off the fuel supply in the event of overheating or flame extinction in the combustion chamber.

1.4 Advantages and disadvantages of operation without an accumulation tank

The advantages of a setup without an accumulation tank are cost savings (accumulation and expansion vessel, connection) and space savings.

The disadvantages are lower thermal comfort in the heated building (the internal temperature fluctuates) and greater demands on the operation of the boiler (the time of refuelling, size of the load, and adjustment of the output must be adapted to the requirements for heat consumption – the outdoor temperature). These disadvantages can be minimised by using pellets during periods of low heat demand (transitional periods - autumn, spring), with the burner automatically stopping or resuming operation according to the building's needs.

Responsible assessment of whether it is possible to implement a setup without an accumulation tank is quite challenging. In addition to knowledge of the thermal parameters of the building, it also requires an assessment of the demands for thermal comfort and control options, see chapters 1.5 and 1.6.

Installation without an accumulation tank is always riskier than with an accumulation tank and thus places greater demands on the experience and professionalism of the seller.

1.5 Conditions for operating the boiler without an accumulation tank when the all-season fuel is bulk wood

Operation of the BLAZE PRAKTIK COMBI boiler without an accumulation tank is only possible in an installation where:

1. **The condition for minimum consumption has been met: Consumption of the nominal output of the boiler is always ensured for at least 1.5 hours or 50% output for 3 hours** (corresponds to the consumption of the boiler output at half the usual fuel load).
   The following condition can be met:

   A. The boiler is the only source of heat in the building with an appropriate thermal capacity, whose heat loss is equal to or greater than **minimum value** defined in table 1.
   B. The boiler is connected to another heat source (heat pump, gas boiler, another wood boiler, etc.) and the regulation of output is managed by switching off individual heat sources, or possibly by the simultaneous operation of both.
   C. The boiler heats the building with a special heating mode featuring intermittent heating, for example, workshops with shift operations, etc.
   D. The boiler is in an installation where there is sufficient heat consumption capacity, e.g. heating of process water, pool heating, greenhouse heating, etc.

2. **Users of the heated building tolerate a lower temperature comfort in the heated building (temperature fluctuations).**

3. **The operator is qualified to refuel at the right time and in the right amount according to the needs of the building and the boiler.**

If the seller is not sufficiently confident that the aforementioned conditions are met, it is necessary to install an accumulation tank.

The reasons that there is no place to put the accumulation tank, or that the customer cannot afford it, are not sufficient. If the seller determines that the tank is necessary and the customer still refuses the tank, the customer must assume the risks themselves. The seller and the manufacturer cannot bear these risks. In such case, it is better to decline the order. If there is an effort, an acceptable place for the tank can be found in the building (it can be distant from the boiler – garage, attic, cellar, shed, an unused corner in the living space, etc.)

1.6 General conditions for connection and operation (with and without an accumulation tank)

The operation of the BLAZE PRAKTIK COMBI boiler is only possible in installations where (points 4-8):

4. **The condition for maximum consumption has been met: The heat loss from the boiler-heated part of the building must not exceed the maximum value defined in table 1, so that during in very cold periods** (average daily temperature below -5 °C …approximately 20 days a year) **it is sufficient to refuel 4 times a day.**
5. **The boiler is correctly installed (hydraulic connection, flue gases removal, electrical installation, etc.).**
6. **The fuel is suitable (e.g. logs of the correct length, appropriately split, dry).**
7. **The boiler is used correctly (ignition, refuelling, setting, ash removal and cleaning, checks).**
8. **The boiler and related equipment (flue gas system, heating system, etc.) are functional.**

Table 1: **Minimum heat loss** of a building where the BLAZE PRAKTIK COMBI boiler can be used without an accumulation tank; and **maximum heat loss** of the building where BLAZE PRAKTIK COMBI is the only heating source

Minimum* and **maximum** thermal loss of a building where the BPC 25 boiler can be used as the only heating source	light structure autoclaved aerated concrete wood, Ytong	usual structure full masonry 25-40cm solid block 40-50 cm	medium-heavy structure full masonry brick, stone 40-60 cm	heavy structure full masonry brick stone 60cm and more
briquettes	**ACCU necessary**	**14 – 24**	**10 – 24**	**8 – 24**
hardwood (beech, hornbeam, acacia, …)**	**ACCU necessary**	**14 – 20**	**10 – 20**	**8 – 20**
medium (birch, mix)**	**ACCU necessary**	**14– 17**	**10 – 17**	**8 – 17**
softwood (spruce, poplar, …)**	**ACCU necessary**	**14 - 14**	**10 – 14**	**8 – 14**

Minimum* and **maximum** thermal loss of a building where the BPC 40 boiler can be used as the only heating source	light structure autoclaved aerated concrete wood, Ytong	usual structure full masonry 25-40cm solid block 40-50 cm	medium-heavy structure full masonry brick, stone 40-60 cm	heavy structure full masonry brick stone 60cm and more
briquettes	**ACCU necessary**	**21 – 36**	**15 – 36**	**12 – 36**
hardwood (beech, hornbeam, acacia, …)**	**ACCU necessary**	**21 – 30**	**15 – 30**	**12 – 30**
medium (birch, mix)**	**ACCU necessary**	**21 – 25**	**15 – 25**	**12 – 25**
softwood (spruce, poplar, …)**	**ACCU necessary**	**21 – 21**	**15 – 21**	**12 – 21**

*** The minimum heat loss condition does not apply if, during the period of low heat demand (in the transitional period - autumn, spring), the boiler is operated using pellets (the burner automatically stops or resumes operation according to the needs of the building).**

*** The condition of minimum heat loss of the building applies if the whole-season fuel is bulk wood.**

*** In large-scale systems, it is possible to include the accumulation capacity of the system: Every 200l of water volume in the system reduces the minimum heat loss value by 1kW (if there is a combined boiler in the radiator circuit, its volume is counted as one third).**

** Applies to standard firewood, i.e., mostly standard regular logs that are smoothly delimbed, with lengths of 25, 33, and 50 cm (depending on the type of boiler). Irregular bulk wood (various lengths, curved, logs with pronounced protrusions from branches, offcuts from wood production, etc.) has poorer filling and therefore it is necessary to refuel 1.2x – 1.5x more often. In the case of irregular bulk wood, the maximum heat loss for the given boiler **(in red)** must be divided by a value of 1.2–1.5 (so that it is not necessary to refuel more than 4 times a day).

2 Technical specifications of the boiler

Table 2. Dimensions and technical parameters of the boiler

Boiler type		**BPC25**	**BPC40**
Weight	kg	330	440
Water capacity	l	40	55
Flue pipe diameter	mm	150	
Volume of the loading chamber	dm^3	80	120
Capacity of the standard pellet hopper	dm^3 kg	370 230	370 230
Boiler dimensions: width x depth x height	mm	1104x1254x1420	1288x1254x1420
Dimension of the loading opening	mm	356 x 356	540 x 356
Maximum fuel length	mm	330	500
Maximum allowable operating pressure	bar	3.0	
Test pressure for type testing	bar	6.0	
Temperature control range of the outlet water	°C	70 – 95	
Maximum allowable operating temperature	°C	95	
Hydraulic loss of the boiler at Δ T = 20 K	mbar	1.65	1.51
Hydraulic loss of the boiler at Δ T = 10 K	mbar	6.14	5.74
Maximum noise level	dB	55	
Minimum operating draft of the chimney [1)]	mbar Pa	0.05 5	
Boiler connections: - heating water	Js	G 6/4"	
- return water	Js	G 6/4"	
Connection voltage		1 PEN ~230V / 0.5A / 50 Hz	
Environment		basic AA5 / AB5	
Ingress protection		IP 20	
Energy efficiency class		A+	

Table 3. Thermal technical parameters of the boiler

Boiler type		**BPC25**	**BPC40**
Nominal output wood/pellets	kW	25/15	40/20
Output controllability by continuous operation with wood	kW	7 – 25	12 – 40
Output controllability by continuous operation with pellets	kW	4 – 15	6 – 20
Wood consumption at nominal output	$kg \cdot h^{-1}$	6.2	9.4
Burning time of a full load of wood			
- at nominal output during certification	h	2	2
- during normal operation of the boiler	h	2 – 6	2 – 5
Pellet consumption at nominal output	$kg \cdot h^{-1}$	3	4.5
Pellet burning time at nominal output (with standard pellet hopper 370 l)	h	76	51
Boiler class according to EN 303-5		5	
Eco-design		yes	
Flue gas temperature [2)]			
- at nominal output – wood	°C	160	160
- at nominal output – pellets	°C	110	110
- at minimum output – wood (30%) [3)]	°C	110	110
- at minimum output – pellets	°C	90	90
Efficiency			
- at nominal output – wood	%	88.6	93.3
- at nominal output – pellets	%	94.2	94.2
- at minimum output – wood (30%) [3)]	%	91.5	94.5

- at minimum output – pellets	%	91.6	93.1
Minimum return water temperature without an integrated thermostat	°C	50	50
Minimum return water temperature with an integrated thermostat	°C	20	20
Mass flow of flue gases at the outlet at nominal output	$kg . s^{-1}$	0.019	0.023
Mass flow of flue gases at the outlet at minimum output	$kg . s^{-1}$	0.008	0.007
Maximum power consumption	W	380	380
Power consumption at nominal output – wood	W	36	47
Power consumption at nominal output – pellets	W	61	67
Power consumption at minimum output – wood	W	18	25
Power consumption at minimum output – pellets	W	37	45
Power consumption in standby mode	W	3	3
Required accumulation tank volume [3]	l	0 – 2000	0 – 3000
Boiler operating mode		Non-condensing	
Boiler category		1	

[1] The requirements for the chimney are described in chapter 5.9

[2] Applies to the clean heat exchanger (with typical fouling, the flue gas temperature is higher by approximately 10 to 20 °C)

[3] The boiler meets the requirements for controllability according to EN 303-5 for a setup without an accumulation tank

3 Prescribed fuels for the boiler

The warranty fuel for the BLAZE PRAKTIK COMBI boiler is the fuel listed in the table below. This is the fuel used during the boiler certification.

Table 4. Warranty fuel for the BLAZE PRAKTIK COMBI boiler

Fuel type		**Wood**	**Wood pellets**
Diameter	[mm]	max. 150	6 – 8
Length	[mm]	330 [1]/ 500 [2]	max. 40
Water content	[%]	max. 20	max. 10
Content of ash	[%]	max. 1,5	max. 0,7
Calorific value	$[MJ.kg^{-1}]$	min. 14	min. 16,5

[1] applies to BPC25

[2] applies to BPC40

The fuel must comply with the requirements of the EN ISO 17225-5 (wood) and EN ISO 17225-2 (wood pellets) standards.

WARNING! Using unsuitable fuel can significantly and negatively impact the boiler's performance and emission parameters.

For more useful information about fuel, see chapter 9.

4 Boiler description

4.1 Boiler design

The boiler design meets the requirements of:

EN 303-5+A1:2023 - Heating boilers – Part 5: Heating boilers for solid fuels, manually and automatically stoked, nominal heat output of up to 500 kW – Terminology, requirements, testing and marking.

BLAZE PRAKTIK COMBI is a gasification boiler, whose main components are: upper gasification (loading) chamber (1), lower combustion chamber (2), and heat exchanger (3,4). The loading chamber and the combustion chamber are connected by a nozzle (20).

The body of the boiler is welded from steel sheets with a thickness of 3 to 8 mm. The walls of the loading chamber (1) are fitted with a steel protective shell (5) made of several segments, interconnected by locking joints. The bottom of the loading chamber is funnel-shaped and is lined with ceramic tiles (21, 35, 45). The nozzles (20) consist of radially arranged slots at the bottom of the loading chamber, which continue into sloped channels leading to the manifold (40) that opens into the combustion chamber. There are secondary air inlets leading to the nozzle (20).

The combustion chamber (2) is lined with ceramic tiles (27). The bottom of the combustion chamber is lined with ceramic tiles (60), insulated with a double-layer insulation with a total thickness of 55 mm.

The heat exchange surfaces of the boiler are formed by the side walls of the combustion chamber (3) and the rear tube heat exchanger (4) with movable turbulators (31).

The boiler is equipped with 30 mm thick mineral wool insulation. The outer surface is made up of steel sheet covers. The lower boiler door contains a sight glass (19) with ceramic tiles.

At the front of the boiler, under the front cover, there is an air distribution panel (30). In its lower part, there are 3 intake openings for combustion air: primary air (50), secondary air (51), and pre-drying air (52) with valves (18). The openings (50, 51, 52) on the outer side are equipped with a sliding shutter (8) for controlling the ratio of secondary air, primary air, and pre-drying air.

In the loading chamber (1), there is a detection arm (12) for the stable ember level function with an axis of rotation in the front wall of the loading chamber. The detection arm (12) is rigidly connected to a balancing arm (44) located in the air distribution panel area (30). Under the balancing arm (44) is the stable ember layer sensor (36). The arm lock (53) is a mechanism consisting of a pressure arm and a compression spring. It presses the detection arm when the door is opened, so as not to obstruct the loading of fuel.

The water inlet coupling (15) opens into the internal distributor (38), from where water enters the boiler's water space through a number of small openings. The water temperature control thermostat in the boiler (33) is located in the inlet coupling (15).

The boiler is supplied with the bottom door mounted on the left side (hinges on the left side). The door can be subsequently reinstalled to the right side as needed.

The pellet burner (57) is located in the lower door on the hinge side.

The exhaust fan (7) can be rotated so that the flue gases (14) discharge in the desired direction.

The boiler is equipped with a cooling circuit for emergency cooling, featuring an inlet coupling (39) and an outlet coupling (37) with internal threads of 1/2" and a socket (42) for the sensor of the emergency cooling fitting.

The upper (loading) door is equipped with a safety lock (26) to secure any opening position.

The regulator control panel (17) is located on the upper door. The control unit itself (6) is located on the back wall of the boiler. For better access, the control unit (6) can be mounted on any side wall of the boiler or on the wall of the boiler room. The control unit (6) and the control panel (17) are connected to each other by a data cable.

The regulator included in the standard boiler equipment allows control of the boiler (wood gasification + pellet burner), charging of the accumulation tank and DHW storage tank, weather-compensated control of 2 mixed heating circuits, and other peripherals. By connecting the expansion module, you can control additional 2 heating circuits. The standard delivery of the regulator includes a flue gas sensor, a boiler temperature sensor, and accumulation tank temperature sensors.

4.2 Description of function – wood burning

Refuelling is usually done when the boiler is shut down (the exhaust fan is not operating). By opening the loading door, the detection arm (12) is automatically folded down by the pressure mechanism (53) so that it does not obstruct the fuel being loaded. Opening the door simultaneously activates sensor (13) and switches exhaust fan (7) to full power.

Assess the layer of cinder left from the previous fuel batch. If this residual layer is still hot, simply add fuel to the loading chamber. If the residual layer is already extinct, it serves as ignition fuel. Before adding fuel, throw a lit paper onto it, for example.

After attaching and closing the door, the exhaust fan creates a vacuum that draws air for combustion into the boiler.

Pre-drying air enters the air distribution panel (30) through the opening on the right (52), rises through the channel in the air distribution panel, passes through the opening in the upper part of the boiler body, and is fed above the fuel layer through the longitudinal opening (43). Its effect accelerates the drying and heating of the new layer of fuel.

Secondary air enters the air distribution panel (30) through the opening in the middle (51), from where it flows through a circular opening in the boiler body to the bottom of the loading chamber, where it is supplied through a series of openings to the channels on the underside of the tiles (21), where it is pre-heated and exits into the flow of gases in the mixing duct (40) of the nozzle (20).

Primary air enters the air distribution panel (30) through the opening on the left (50), from there it flows behind the shell of the loading chamber (5) and then exits into the lower layer of fuel. Its effect leads to the primary combustion of fuel (gasification). The emerging wood gas flows through the nozzle (20) into the mixer (40), where it mixes with secondary air. There is combustion of gaseous components (secondary combustion) in the combustion chamber (2). Hot flue gases flow through the rear tiles (27) into the heat exchanger, where they transfer their heat to the heated water. The exhaust fan (7) draws in the flue gases and pushes them through the neck (14) into the chimney.

The ash settles into the combustion chamber (2), from where it can be removed.

The fan speed is controlled by the regulator based on the temperature of the water and flue gases, as well as the current output demand.

The lambda sensor evaluates the proportion of residual oxygen in the flue gases and, based on this value, adjusts the shutter (8) via a stepper motor to achieve the set optimal value.

After the fuel has burned down to the base layer, the detection arm (12) will stop pressing and will tilt upwards towards the loading chamber, which is detected by sensor (36), which through the regulator switches off the exhaust fan (7). The boiler then switches to stable ember level shutdown. Depending on the chimney draft, the type of fuel used, etc., the base layer will maintain heat for up to 8 hours.

The thermostat (33) restricts the flow of water to the internal water distributor so that the temperature of the heat exchange surfaces is above 60 °C.

4.3 Description of function – pellet burning

The rotary burner is assembled from individual modules. The burner hearth, exposed to the highest temperatures, is made from a special InCroX© alloy with a high chromium content. Other temperature-stressed parts are made of stainless heat-resistant sheet metal. Other burner components and the external fuel feeder are protected by zinc plating or paint.

The burner consists of basic components, which are shown in the figure in chapter 4.4.

The burner operation is initiated by supplying fuel from an external hopper (9) via an auger feeder (8), connected to the burner itself by a flexible pipe (7). The fuel batch is then moved by the auger feeder (12) into the combustion chamber (1). After supplying a sufficient amount of fuel into the combustion chamber, it is ignited by an electric coil (13).

After ignition, the burner switches to normal operation mode according to the predefined parameters. Air, which is essential for fuel combustion, is supplied by the fan (10) through the air duct (5) and the rotary chamber (2) into the

combustion chamber (1). A certain amount of air flows into the rotary chamber (2) around the electric ignition coil (13). The air supply to the burner is located at its bottom part. During burner operation, the combustion chamber (1) cyclically rotates using a rotary mechanism (11). The rotation frequency can be adjusted on the control unit. Ash from the burnt pellets moves forward in the burner and falls into the lower chamber of the boiler body.

The burner operation is fully automatic and adjustable. Fuel is dosed from the hopper depending on the required heat output. When the desired temperature is reached, the burner switches to standby mode through shutdown control. The transition from standby mode through ignition and flame stabilization to operating mode is also automatic. Complete operation of the burner consists solely of correctly setting the parameters of the feeder and the exhaust fan, replenishing the required amount of fuel, and removing ash from the boiler.

The burner and regulator are equipped with safety features that protect both the burner and the boiler from overheating and other hazards that may occur during operation.

The first of these is a photosensor that detects the brightness of the flame. If no flame is detected in the burner, the burner will initiate the ignition mode. The set amount of fuel is supplied to the combustion chamber and the ignition coil is activated. With a slight delay, the fan will also be activated. Under normal circumstances, the fuel ignites after approximately 2 to 3 minutes, and once the firebed stabilizes, the boiler switches to operating mode.

If the pellets do not ignite, the ignition mode will be repeated twice more. If these attempts to ignite the fuel are also unsuccessful, a corresponding alarm will appear on the regulator's display and the boiler will shut down. Subsequent restarting is only possible after the fault has been cleared by the operator.

The second safety feature is the temperature sensor in the burner. If this temperature rises above 60°C, the control unit will cut off the fuel supply from the external hopper. This is an irreversible alarm that can only be cleared by the operator.

Another safety feature is the very design of the fuel supply system. Thanks to the use of two auger feeders (the first feeds fuel from an external hopper (8) and the second doses fuel into the combustion chamber (12)), interconnected by a meltable flexible pipe (7), the flow of fuel supplied between the boiler and the hopper is separated. If a fuel ignition occurs in the feeder to the combustion chamber (12), the fuel in the feeder (8) and the external hopper (9) will not ignite.

4.4 Burner schematic

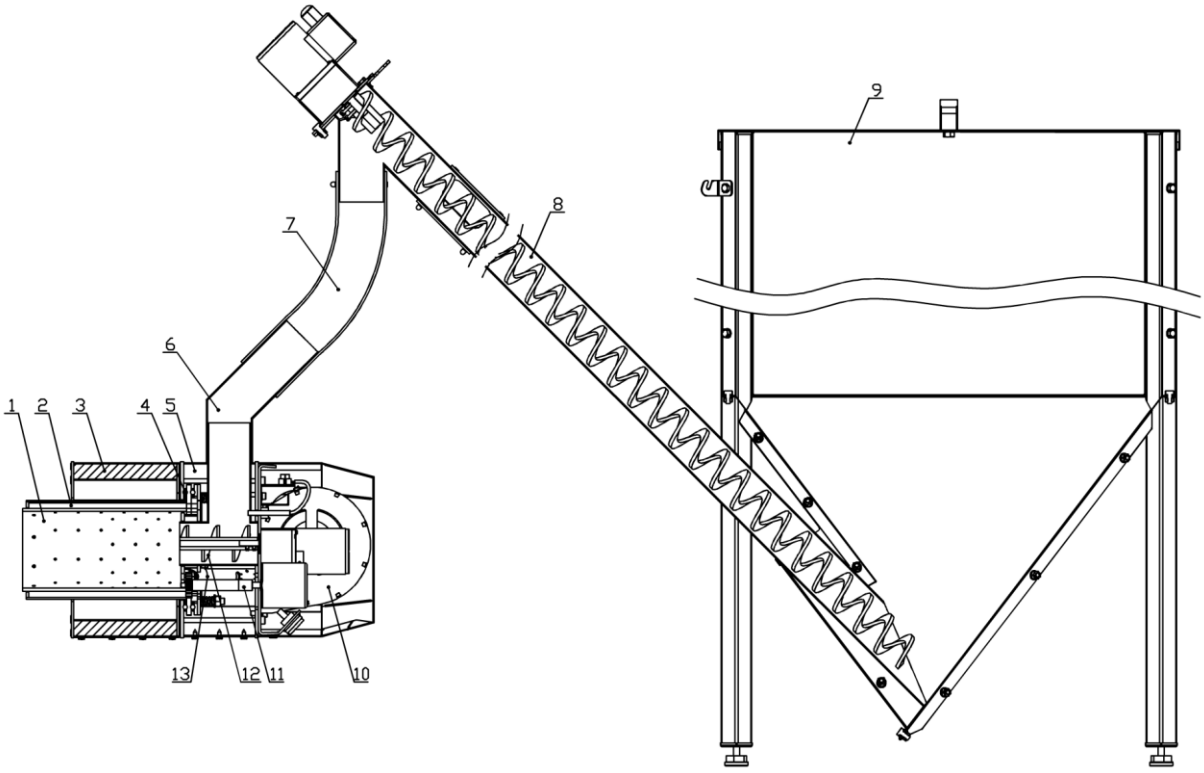

1 – Rotary combustion chamber

2 – Aeration rotary chamber

3 – Thermal insulation of the combustion chamber

4 – Bearings of the aeration and combustion chamber

5 – Air chamber

6 – Pellet supply coupling

7 – Flexible piping

8 – Fuel feeder from external hopper

9 – External fuel tank (not included in the standard boiler equipment)

10 – Fan

11 – Mechanism of combustion chamber rotation

12 – Fuel feeder to the combustion chamber

13 – Electric ignition coil

4.5 Boiler dimensions

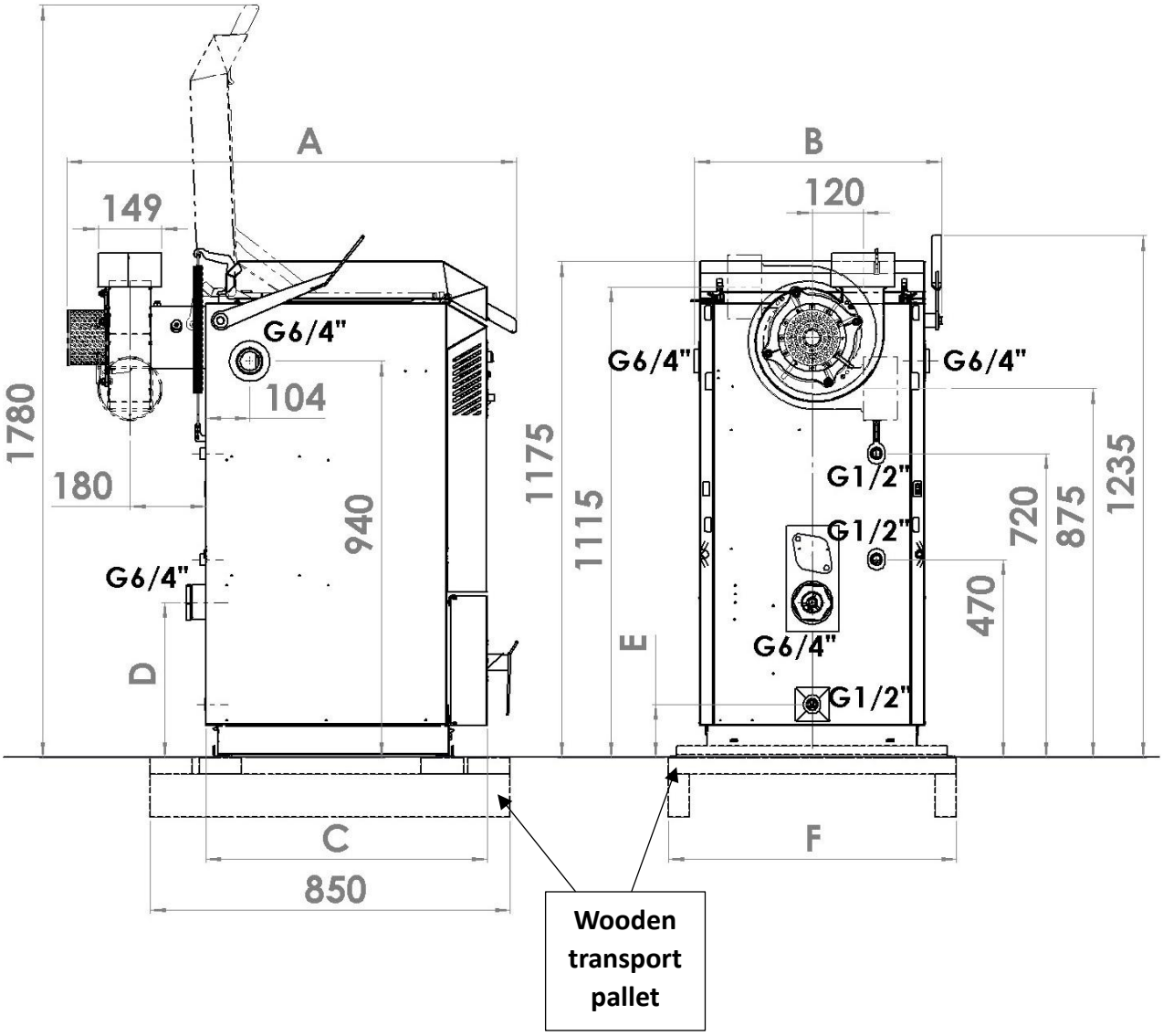

Boiler body dimensions

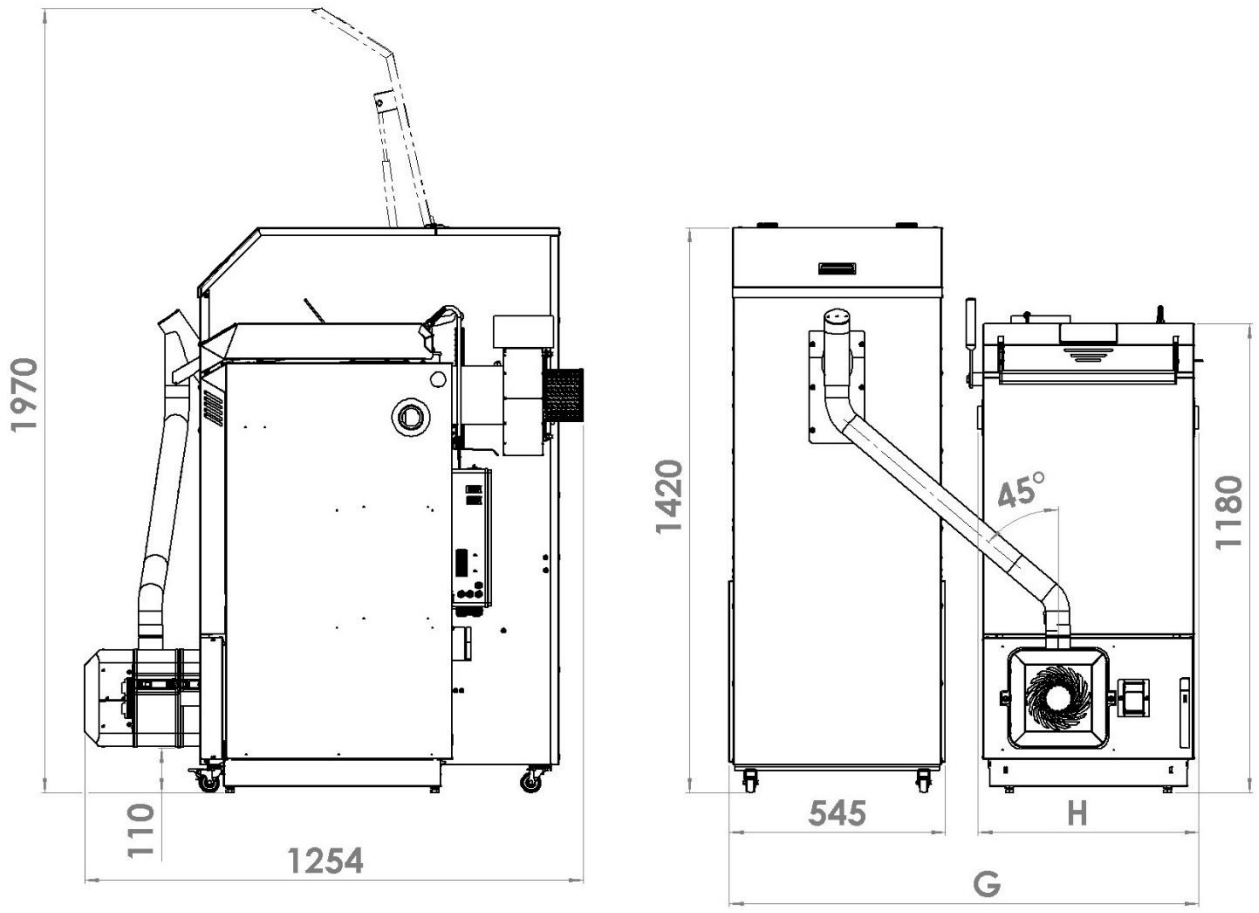

Dimensions of the boiler with a standard pellet hopper (370 l)

Table 5. Table of basic dimensions of the BLAZE PRAKTIK COMBI boiler with a standard pellet hopper (370 l)

	BPC25	**BPC40**
A [mm]	1040	1040
B [mm]	584	768
C [mm]	664	664
D [mm]	370	370
E [mm]	130	130
F [mm]	680	870
G [mm]	1104	1288
H [mm]	530	714

4.6 Boiler schematic

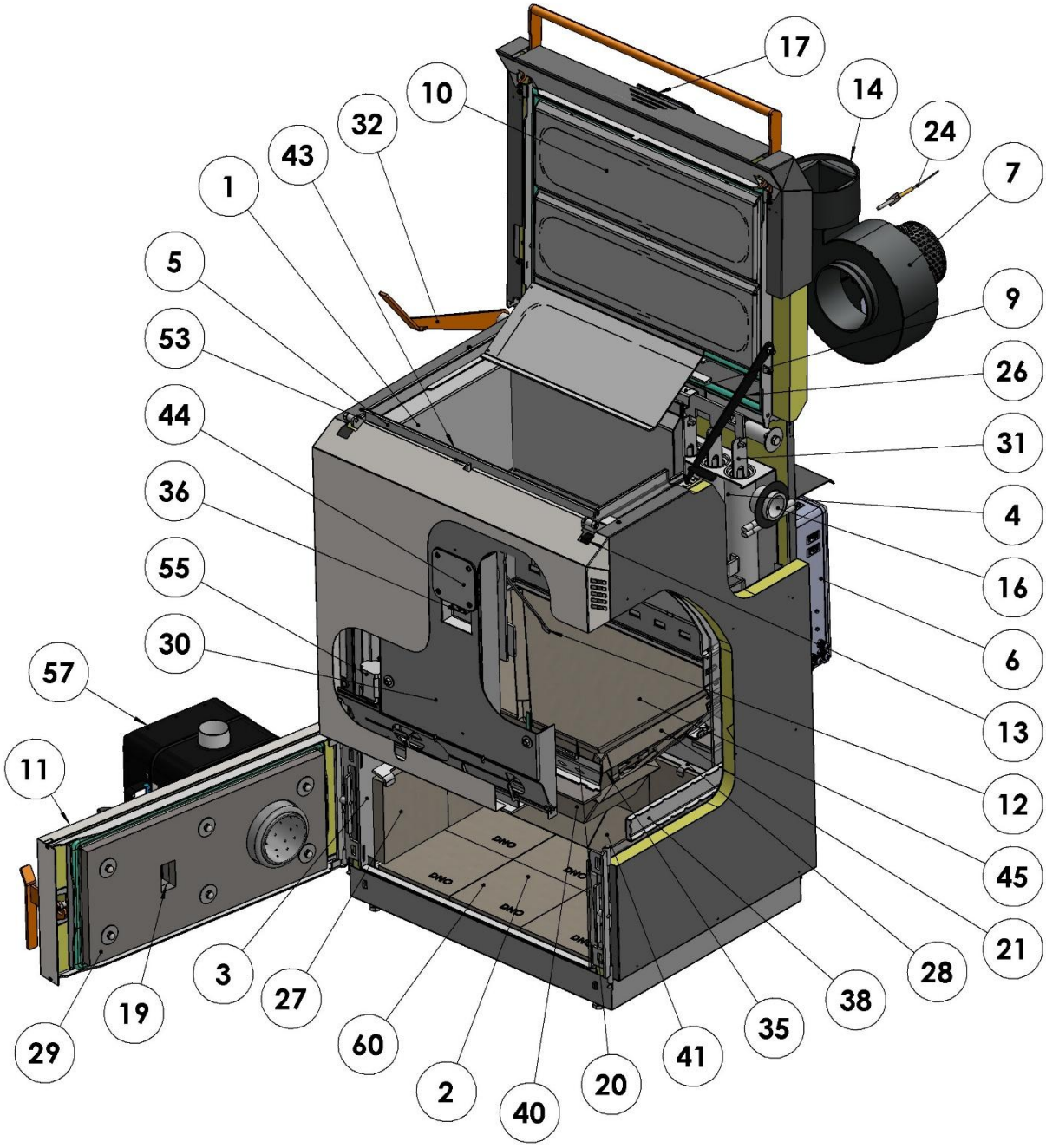

Boiler schematic – front view

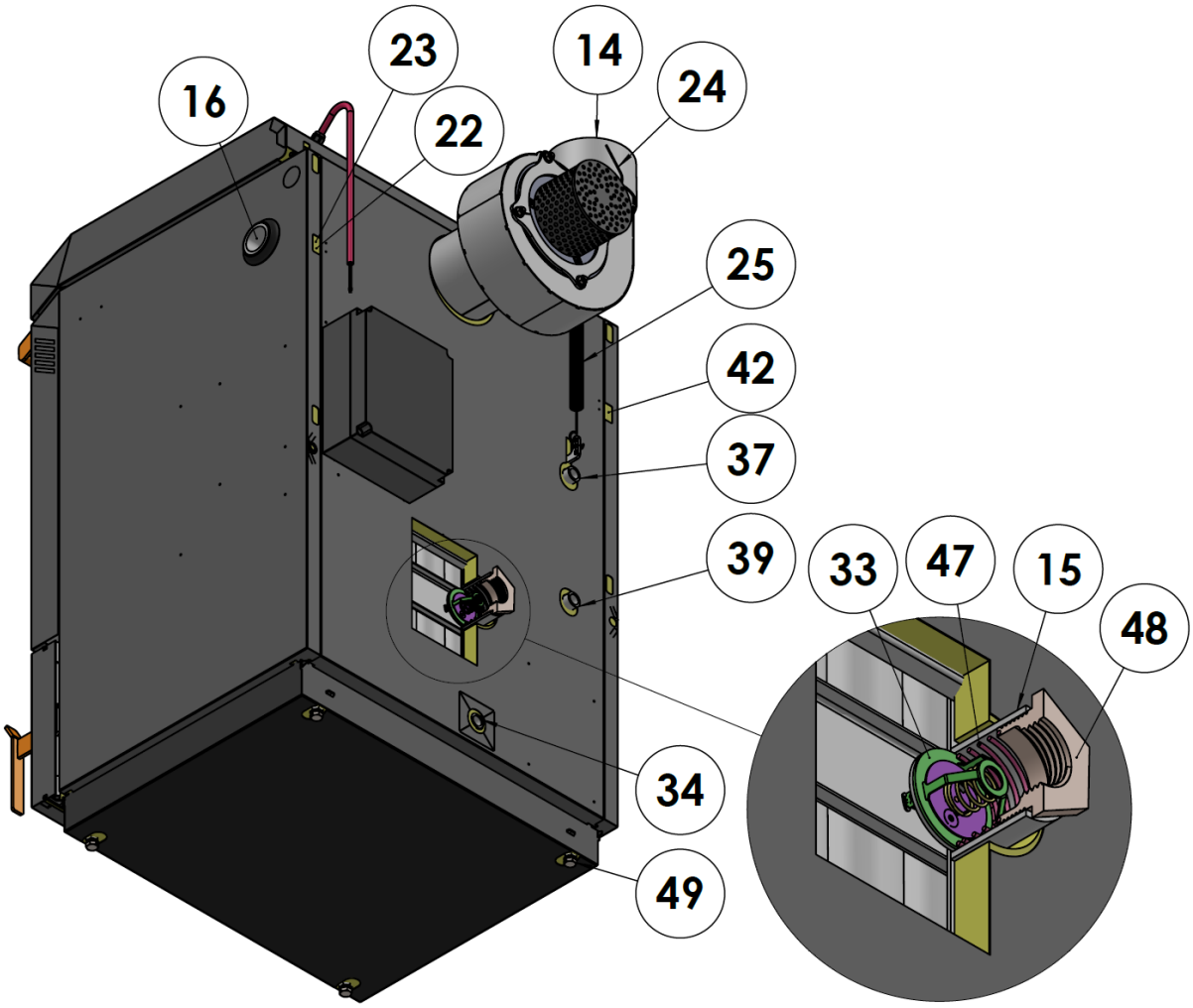

Boiler schematic – rear view

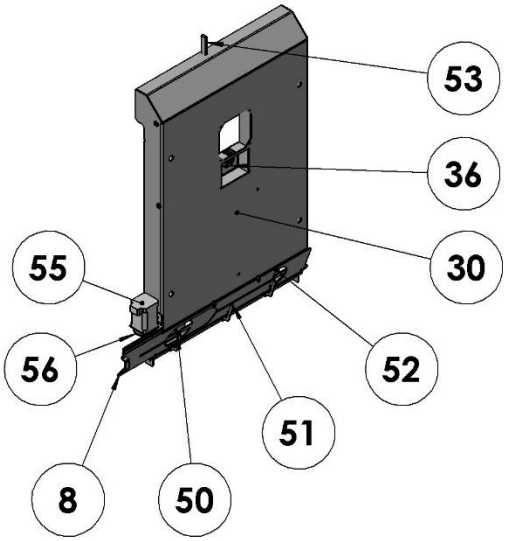

Boiler schematic – air supply detail

BLAZE PRAKTIK COMBI 25

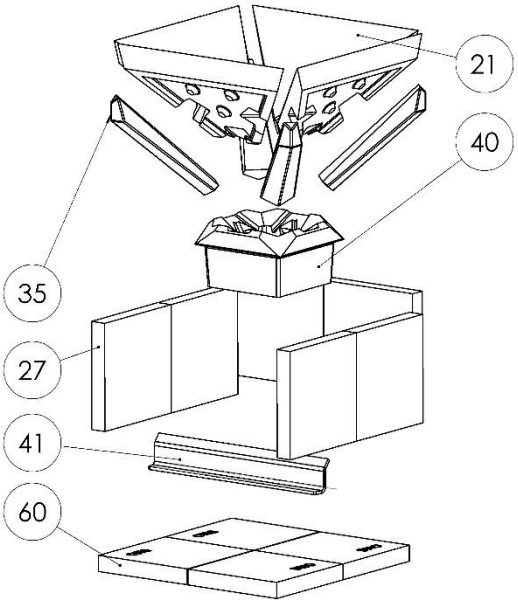

BLAZE PRAKTIK COMBI 40

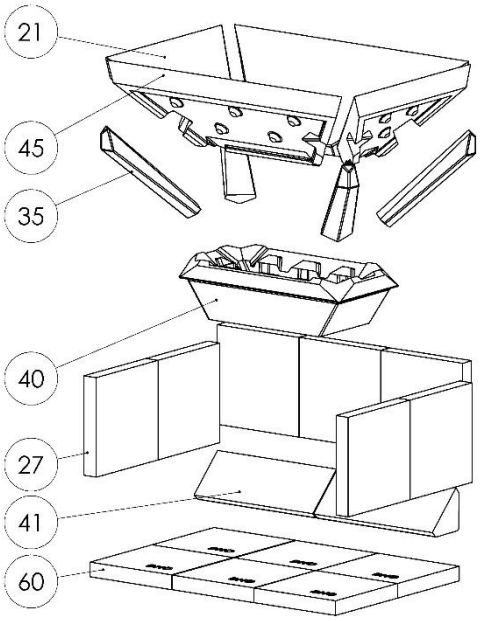

Tile arrangement by boiler type

Legend

1. Loading chamber
2. Combustion chamber
3. Flue gas exchanger, side
4. Flue gas exchanger, rear
5. Shell of the loading chamber
6. Boiler control unit
7. Flue gas exhaust fan
8. Secondary-air regulator (sliding shutter)
9. Plug of the upper heat exchanger
10. Upper door
11. Lower door
12. Detection arm of stable ember layer
13. Upper-door sensor
14. Flue gas outlet
15. Inlet coupling G 2/2" (internal)
16. Outlet coupling G 6/4" (internal)
17. Regulator control panel
18. Air valve (3x)
19. Sight window with ceramic glass
20. Nozzle (duct connecting the loading chamber and combustion chamber)
21. Diagonal tile (4x [1], 2x [2])
22. Emergency thermostat
23. Water temperature sensor
24. Flue gas temperature sensor
25. Auxiliary spring for the upper door
26. Locking strut
27. Tile of the combustion chamber (6x [1], 7x [2])
28. Rear tiles bar
29. Heat insulation of the lower door
30. Air distribution panel
31. Turbulators (6x [1], 9x [2])
32. Turbulator lever
33. Thermostat of integrated mixing
34. Outlet and inlet coupling 1/2"
35. Corner tile (4x)
36. Hot ember layer detection sensor
37. Cooling water outlet
38. Internal water distributor
39. Cooling water inlet
40. Mixer tile
41. Heat exchanger plug tile (1x [1], 2x [2])
42. Well for the cooling fitting sensor
43. Pre-drying air outlet
44. Balancing arm
45. Long tile (2x [2])
46.
47. Thermostat pressure spring
48. Reducer 2 ½" to 6/4"
49. Boiler foot screw
50. Primary air inlet
51. Secondary air inlet
52. Pre-drying air inlet
53. Fuel detection arm lock
54.
55. Shutter drive (stepper motor)
56. Stepper motor gear wheel
57. Pellet burner
58.
59.
60. Tile of the combustion chamber - bottom (4x [1], 6x [2])

[1] Only for the BLAZE PRAKTIK COMBI 25

[2] Only for the BLAZE PRAKTIK COMBI 40

5 Boiler assembly and installation

During installation and operation of the boiler, all local rules and regulations relating to national and European standards must be observed. Assembly and installation may only be carried out by an authorised person.

5.1 Checking the quality and completeness

a) Check for any hidden damage that may have occurred during transport, even if the boiler packaging was not damaged. If you find any damage, please promptly send information along with photographic documentation to the e-mail: info@blazeharmony.com.

b) Check the contents of the boiler packaging. The BLAZE PRAKTIK COMBI boiler includes:
   - complete boiler body with regulator
   - reducer 2 1/2" to 6/4"
   - exhaust fan
   - lever of turbulators with connecting parts (screws, nuts)
   - cleaning tool set (2x)
   - integrated-mixing thermostat + thermostat spring
   - lambda sensor
   - Sensor CT10 (4 pcs) (1 for MIX, 1 for DHW and 2 for ACCU)
   - flue gas sensor CT2S
   - connector for connecting equipment 230V (6x)
   - boiler operating and installation manual
   - warranty certificate

5.2 Removing parts of the boiler before relocation to the boiler room

The boiler is delivered on a wooden shipping pallet, which allows for handling with a pallet truck. The boiler is attached to the pallet with two steel cross strips using 4 M12 screws. After placing it in the boiler room, dismantle the pallet and reattach the base screws (these are used to set the boiler in a horizontal position). To reduce the weight of the boiler, you can remove some of its parts according to the following procedure:

a) Removal of ceramic tiles from the combustion chamber
   - Pull the side tiles towards you.

   - Flip the rear tiles towards you and remove the stainless-steel strip. Then remove the rear tiles.

   - Remove the tiles from the bottom last.

   (Arrangement of ceramic tiles in the combustion chamber – see chapter 4.6.)

b) Removal of ceramic tiles from the loading chamber
   - Remove the tiles from the loading chamber

   (Arrangement of ceramic tiles in the loading chamber – see chapter 4.6.)

c) Removing boiler covers
   - It is necessary to remove the regulator switchboard and any cables entering under the boiler cover.

   - We do not recommend removing the bottom cover. When not using a transport pallet, it may be damaged and it will not be possible to reinstall the covers.

   (The regulator switchboard is located on the back wall of the boiler.)

d) Removal of the lower door
   - Before removing the lower door, first remove the front cover.

- Open the door and pull it upwards to release it from the hinge.

<u>When assembling the boiler, proceed in the reverse order of disassembly. Caution! Do not confuse the combustion chamber tiles – bottom (section 4.6., position 60) with the side/rear combustion chamber tiles (section 4.6., position 27).</u>

1.

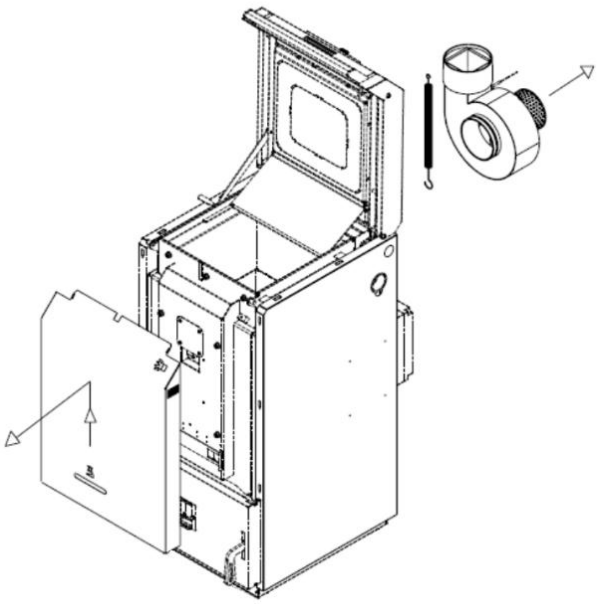

3.

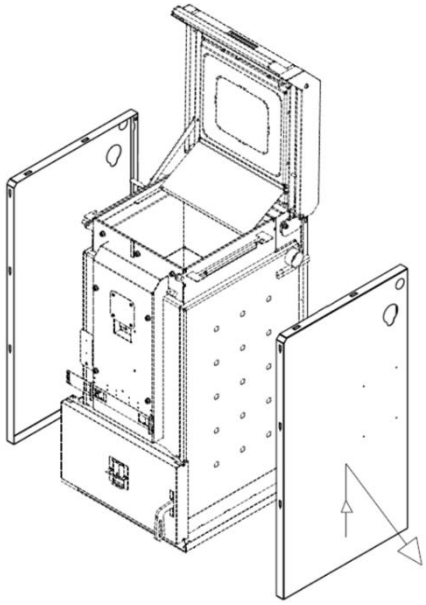

2.

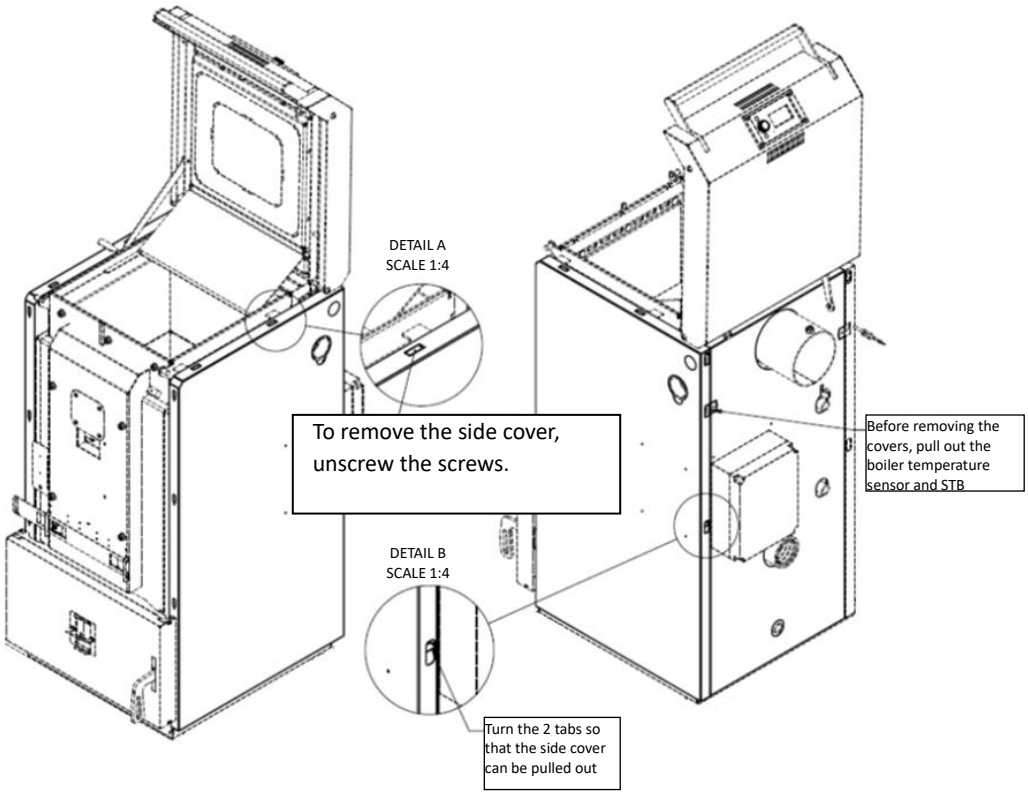

5.3 Disassembly of the transport pallet

1.

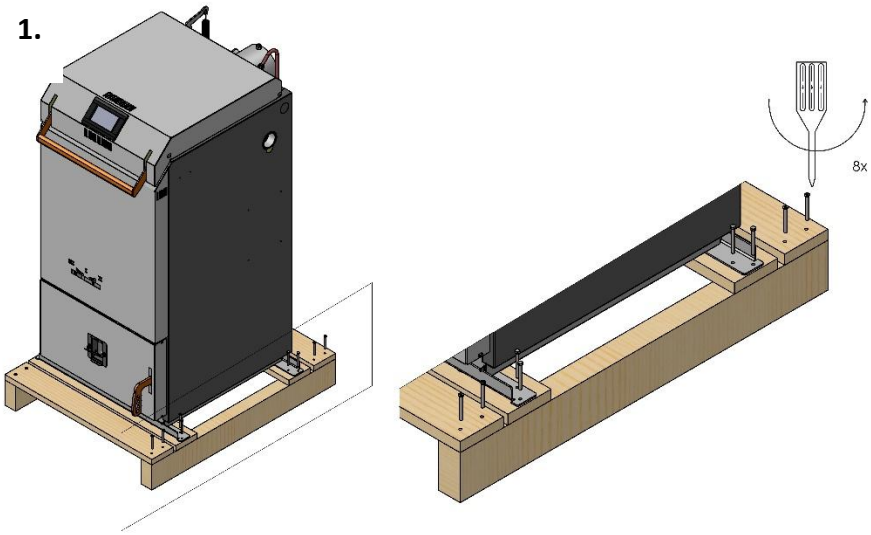

2.

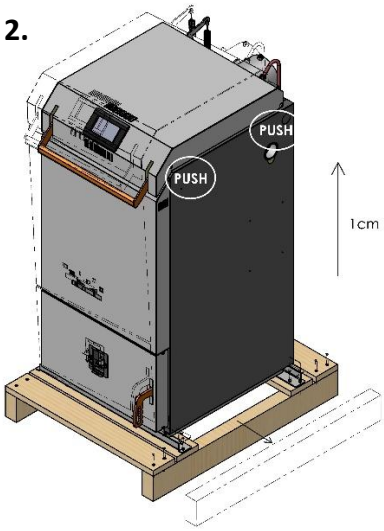

3.

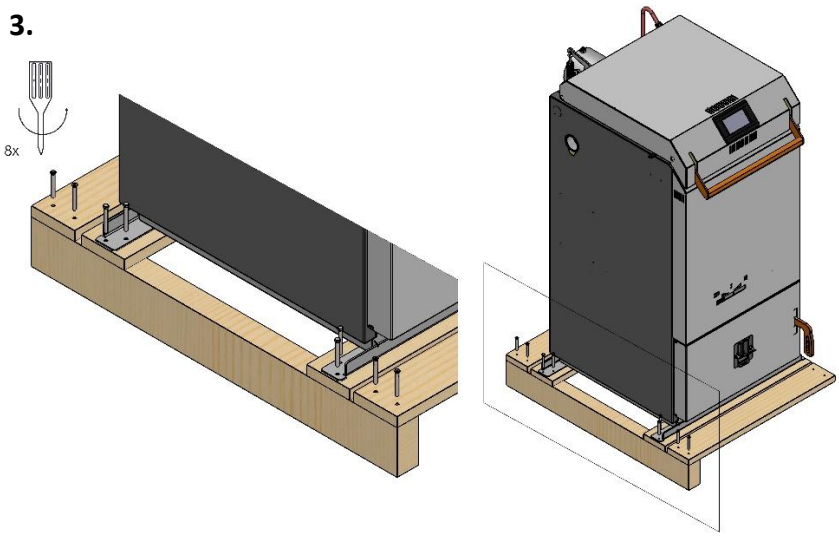

4.

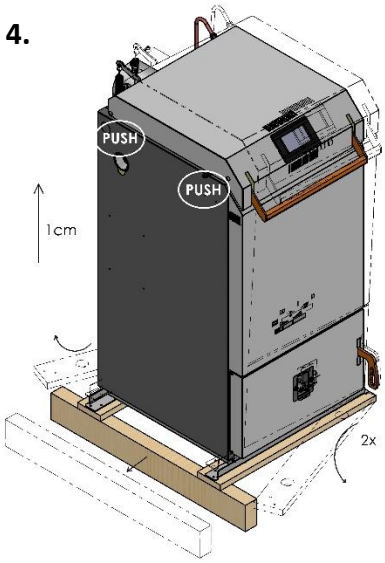

5.

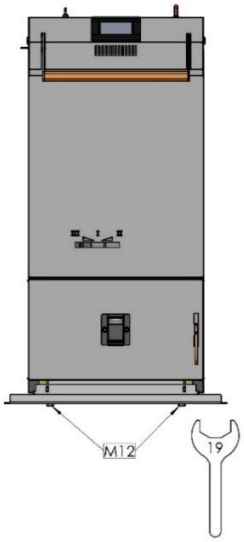

6.

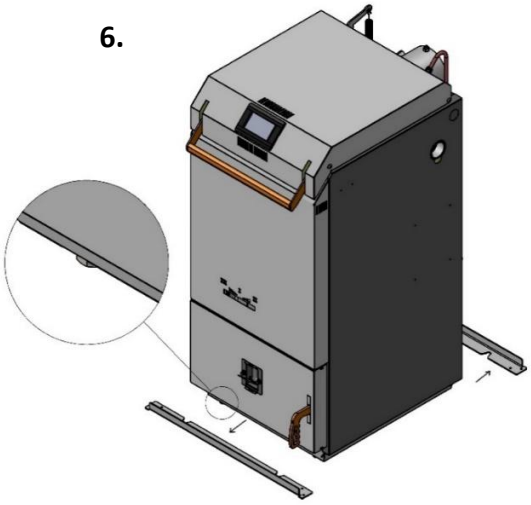

Procedure for disassembling the transport pallet:

- Remove the cross protective boards (front and back wall of the boiler).
- Unscrew the screws of the cross steel strips (on the side wall of the boiler).
- Tilt the boiler to the side and pull out the longitudinal beam on the opposite side. Do the same on the opposite side.
- Tilt the boiler slightly backwards and pull out the front cross support board. Do the same on the opposite side.
- Loosen the 4 M12 screws (spanner no. 19) between the floor and the cross strips. There is no need to lift the boiler when loosening. Screws only need to be loosened by a full turn.
- Lean the boiler slightly backwards and move the front strip to the side by approximately 20 mm. This will release the screw from the head and it will fall down. Do the same on the opposite side.
- Using the 4 M12 screws, install the boiler in a stable horizontal position.

5.4 Handling the boiler

When handling the boiler during transport to the boiler room, we recommend using the 6/4" outlet couplings on the side walls of the body, into which common steel pipes with external thread G 6/4" are screwed (to a depth of at least 40 mm) – see picture below.
Another suitable element when handling the boiler is the flue gas outlet – see the image below on the left.

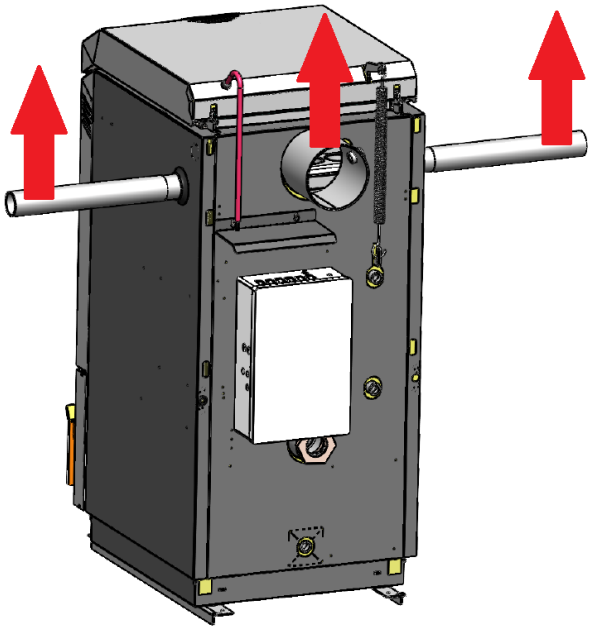

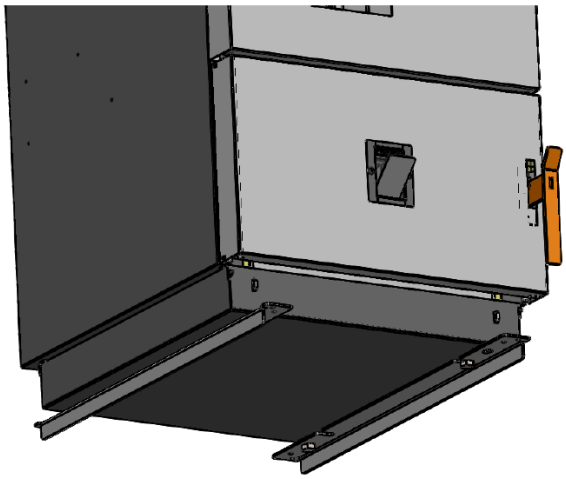

To move the boiler across the floor, you can also use the transport strips that were used to secure the boiler to the pallet. By installing them on the boiler in the inverted position – see the image below – sliding strips are created, which facilitate the movement of the boiler across a horizontal floor, for example, using rollers.

This method of handling the boiler is only possible in cases where there is no risk of damage to the floor (or where damage does not matter).

Any other method of handling the boiler (by the door, shell, regulator, etc.) poses a risk of damage to the boiler.

5.5 Placing the boiler in the boiler room

There must be a sufficient free space around the boiler (see the image below) for operation, maintenance, or potential servicing.

To facilitate access to the control unit, it can be relocated from the back wall of the boiler to the side wall, or alternatively to the wall of the boiler room.

The boiler must be placed on a non-combustible, heat-insulating base, extending beyond its footprint at the front by at least 300 mm and on the other sides by at least 100 mm.

The minimum permissible distances of the outer contours of the boiler from combustible materials (see EN 13501-1) must be at least 400 mm. Flammable materials must not be placed in front of the appliance and within a distance less than the safe distance from it.

If there is no suitable space in the heated building, heating can be provided from a nearby building (garage, barn, workshop), where the boiler and usually the tank are placed. Ground pre-insulated pipes can be used to connect buildings.

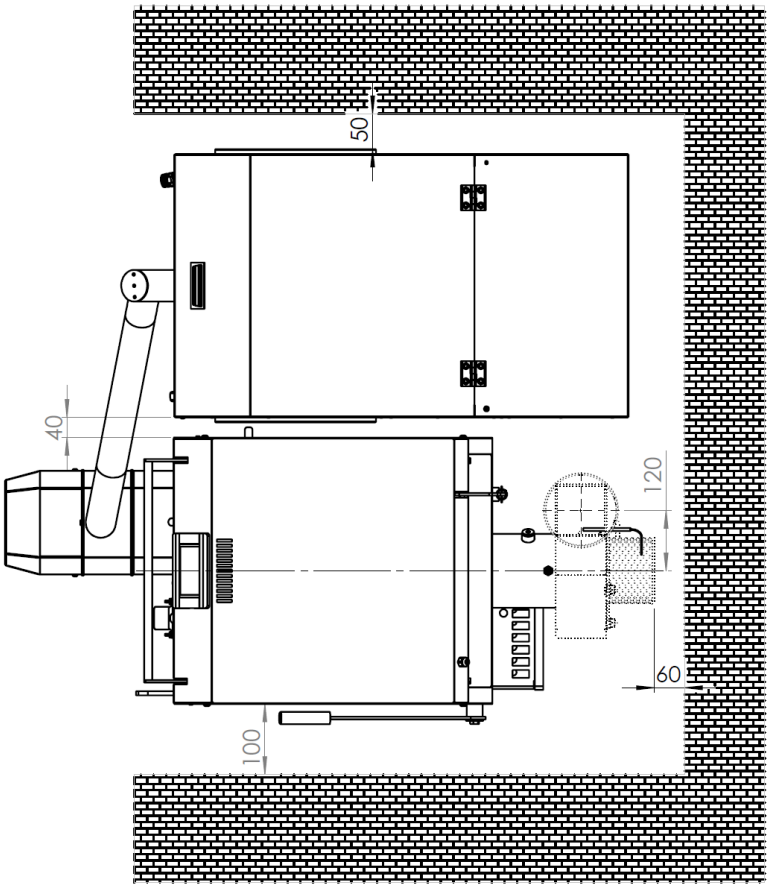

Minimum dimensions for boiler placement

5.6 Switching the lower door

If the serially supplied arrangement of the lower door (hinge on the left, handle on the right) is unsuitable, it is possible to reconfigure this arrangement using the following procedure:

- Open the loading door.
- Lift the boiler door, i.e., raise the door upwards, gently tilt it (release the upper hinge) and by sliding it back down, release the lower hinge.
- Remove the sight glass (A) from the door, rotate it 180°, and reinstall it into the door.
- Loosen the nut (B), remove the handle from the door, rotate it 180° and reassemble it in the reverse order. (If necessary, the cover of the door can be released by turning the tab and freeing it from the stop (C).)
- Rotate the modified door by 180° and fit it onto the hinges on the opposite (right) side.
- Finally, close the loading door properly.

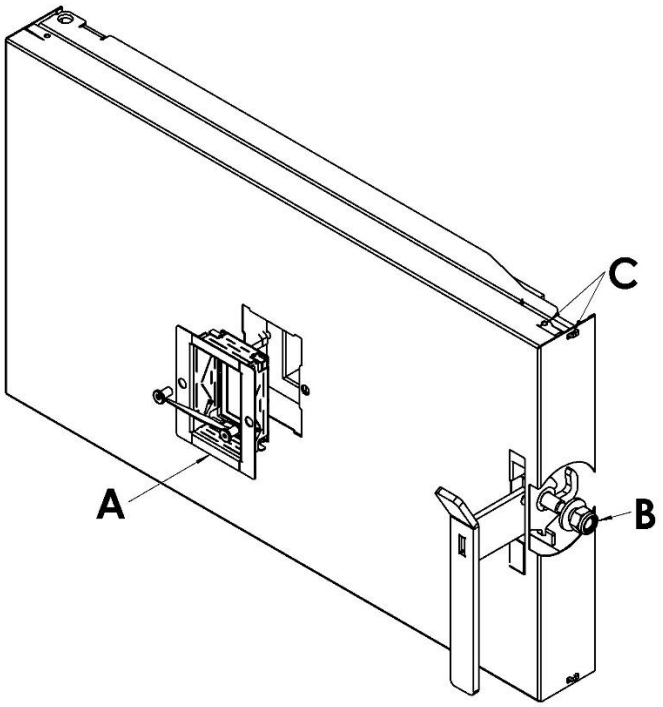

5.7 Installation of the exhaust fan

The exhaust fan is supplied detached, and for transport, it is stored in the loading chamber of the boiler.

- Loosen the hex socket screw on the flue pipe of the boiler.
- Attach the exhaust fan and select the desired position for the installation – see image on p. 16. Then secure with a screw with the hex socket screw.
- Connect the exhaust fan cable (5-pin connector) to the boiler control unit.
- Place the flue gas sensor into the opening of the exhaust fan and secure it with a screw. Make its electrical connection to the boiler control unit.

5.8 Installation and operation of the lambda sensor

The boiler is supplied with a lambda sensor that ensures continuous regulation of the air supply for combustion. The lambda sensor continuously regulates the combustion air supply based on the measured residual oxygen content in the flue gases. Thanks to the lambda sensor, the regulator knows the value of residual oxygen in the flue gases. Based on this information, the electric drive then determines the ratio of secondary air to primary air for combustion by adjusting the movement of the air supply shutter.

Installation of the lambda sensor:

Screw the lambda sensor into the outlet coupling of the flue gas outlet (between the boiler and the exhaust fan) – see the picture. Plug the lambda sensor connection cable connector into the control unit on the back panel of the boiler.

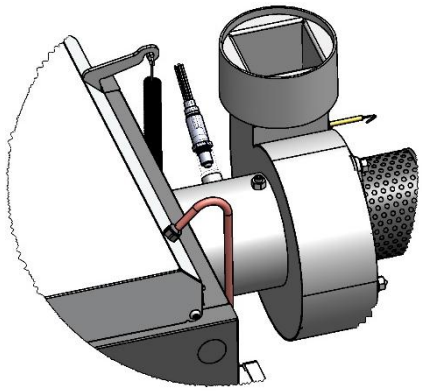

Installation of the lambda sensor on the boiler

Before installing the lambda sensor, make sure the boiler is disconnected from the mains power supply!

Lambda sensor operation:

During boiler operation, the combustion air shutter is automatically controlled based on the measured residual oxygen value in the flue gases. The control unit moves the shutter using a stepper motor: At an oxygen level higher than the set value, the regulator moves the shutter to the left. This increases the proportion of primary and pre-drying air. The oxygen content in the flue gases decreases.

When the oxygen level is lower than the set value, the regulator moves the shutter to the right. This increases the proportion of secondary air. The oxygen content in the flue gases increases.

During the ignition and combustion of the fuel, oxygen levels are higher, and the shutter is usually positioned to the left.

Every opening of the loading chamber during boiler operation affects the measured oxygen value in the flue gases.

5.9 Connection to the chimney

For the proper commissioning of the boiler into permanent operation, a chimney inspection is required, which is only valid if it consists of the following parts: inspection report, technical report, and calculation of the flue gas path. Whether the existing chimney is suitable for the type of boiler used needs to be verified by a calculation from a chimney sweeper before the installation of the boiler.

As the boiler is equipped with an exhaust fan, the requirements for the chimney draft are minimal. The flue cross-section must be large enough for the chimney to be able to discharge a greater amount of flue gases during loading and ignition. When the door is open, the boiler produces approximately double the amount of flue gases compared to operation at nominal output.

Table 6. Diameters of the chimney flue of the BLAZE PRAKTIK COMBI boilers

Boiler		**BPC25, BPC40**
Recommended diameter of the chimney flue	[mm]	180
Minimum diameter of the chimney flue	[mm]	150

We do not recommend a chimney draft regulator for standard chimneys (with operating drafts of 10 to 30 Pa). They are a source of leaks and transfer heat from the heated building to the chimney.

The flue pipe must be securely assembled and secured to prevent any accidental or spontaneous release of its parts. A flue longer than 2 m must be securely anchored. All components of the flue pipe must be made of non-combustible materials. We recommend sealing the gaps in the flue pipe with a suitable flexible sealant or by using aluminium tape.

For flue pipes longer than 1 metre, we recommend fitting suitable insulation, for example, made of mineral wool with an outer aluminium foil. In an uninsulated flue pipe, there is intense cooling of the flue gases. During operation at low output, there is a risk of condensation of moisture from the flue gases.

The chimney door must be tight. Sealing can be achieved by an additional cover with a rubber sleeve secured, for example, with screws.

We recommend that the chimney flue is sufficiently thermally insulated. The ideal situation is a chimney located within the building, as outdoor chimneys experience greater cooling. The minimum permissible flue gas temperature 1 m below the upper edge (outlet) of the chimney is 90 ^{o}C.

5.10 Supplying air to the boiler

The air needed for combustion can be supplied to the boiler room directly from the external environment or from the living spaceAir for combustion can be supplied from the living space, provided that the required combustion-air supply and applicable ventilation requirements are met. At an output of 10 kW, the air consumption is approximately 20 m^3/h, which corresponds to the hygienic minimum for air exchange in a typical apartment layout.

When loading, with the loading door open and the boiler's exhaust fan operating at full capacity, the air consumption is 100–200 m^3/h.

If the natural infiltration (micro-ventilation of windows and doors) does not provide a sufficient amount of air, it is necessary to ensure it through a ventilation opening from the outdoor environment with an area of at least 150 cm^2.

The control grilles on the ventilation openings must be positioned in such a way that they do not become blocked.

We recommend installing a carbon monoxide detector near the boiler.

5.11 Installation of the pellet burner

The lower door is factory-fitted with sealing insulation and a spacer flange. These parts are secured using 2 pieces of M8 extension nuts. The burner is mounted onto the spacer flange and secured with 2 buckles on the sides (buckles are included in the accessories).

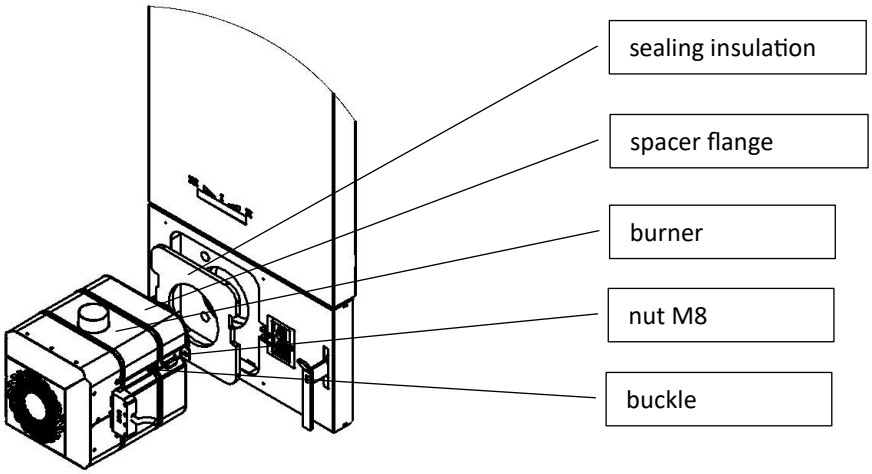

Installation of the pellet burner into the boiler door

External fuel feeder with burner is connected using a flexible pipe – see chapter 4.4.

Pellet burner is connected to the regulator (module P) via a single 10-wire signal cable. This cable supplies power to the individual burner components (pressure fan, feeder 2, ignition, rotary cleaning drive, optical flame detection sensor, and burner temperature safety sensor).

Burner cable conductor number:	Terminal number in the regulator:	Burner element:
1	115	Pressure fan
2	111	Ignition
3	66	Hall sensor – IN
4	112	Rotary cleaning
5	85	Burner temperature sensor
6	87	Optical sensor
7	67	Hall sensor - GND
8	89	Hall sensor – power 12V
9	105	Common neutral 230V
PE	GR strip	Grounding

The fuel feeder is connected to the regulator (module P) using a single 3-wire cable. The feeder cable is detachable with a PC connector (IEC C14/IEC C13).

Feeder cable conductor:	Terminal number in the regulator:
brown	114
blue	104
yellow-green	grounding jumper

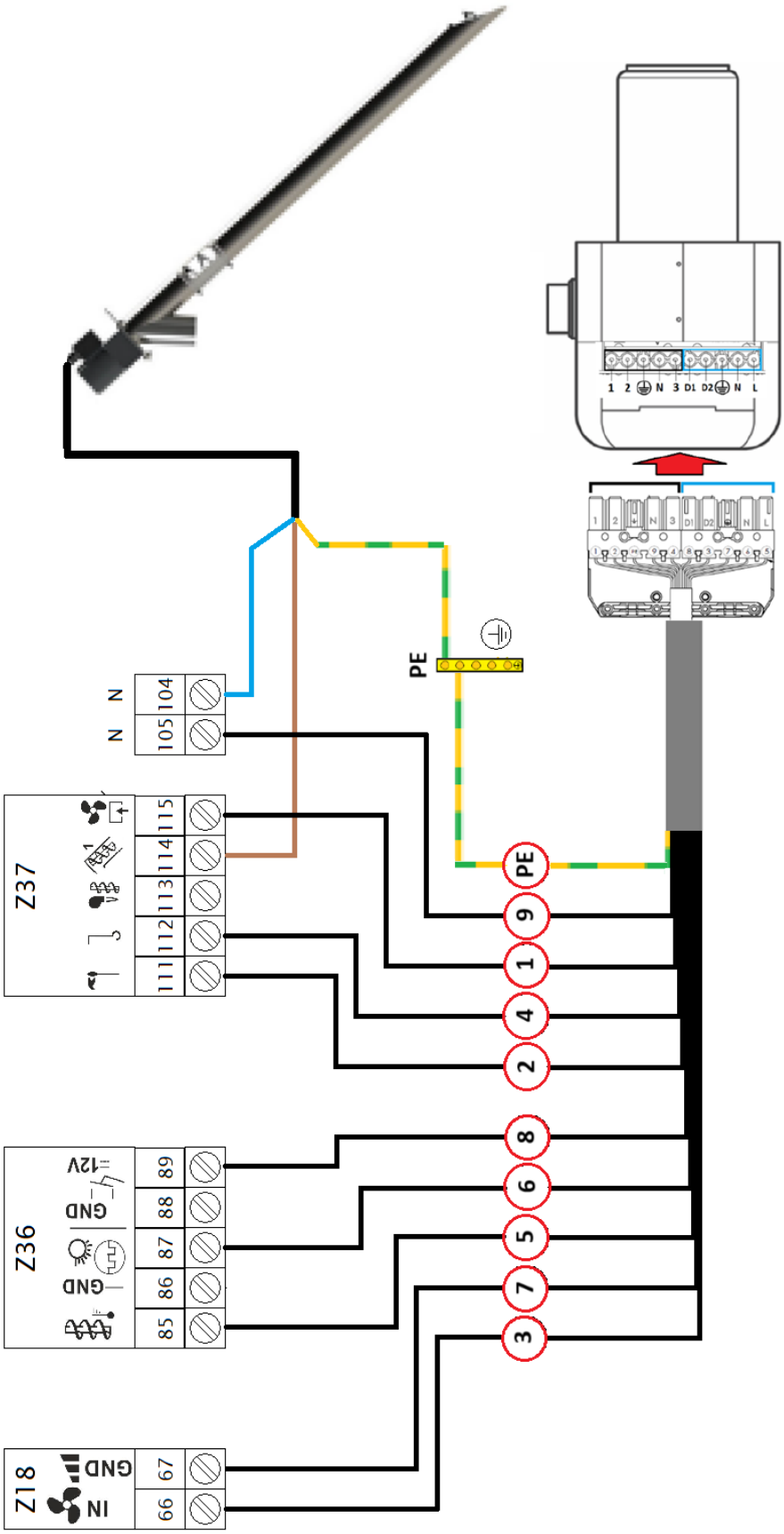

Wiring diagram of the burner and feeder signal cable

5.12 Heating system design, connection of the boiler

5.12.1 Integrated-mixing system

The boiler is equipped with an integrated-mixing system where the internal thermostat (original Blaze Harmony thermostat with order code 801/400242 – see Boiler schematic, item 33) together with the internal mixing duct system ensures that the temperature of all heat transfer surfaces is above 60 °C. This protects the boiler against low-temperature corrosion even when connected without a controlled mixing branch (with a temperature-controlled mixing valve). This mixing works very well even with a gravity circulation setup. At return water temperatures lower than 50 °C, the integrated-mixing thermostat closes. The subsequent flow restriction is accompanied by an increase in the temperature of the outlet water. At very low return water temperatures (below 20 °C), the outlet water temperature may therefore exceed 90 °C, and the transmitted output is somewhat limited. At very low temperatures of the return water, the boiler start-up must be gradual to prevent overheating of the boiler.

If the boiler is connected in a circuit with controlled return water to the boiler (three-way or four-way valve with temperature-controlled mixing), the thermostat of the integrated mixing does not activate.

The integrated-mixing thermostat valve includes an opening to ensure minimum flow and venting. The size of the opening must be adjusted according to the type of circulation in the boiler circuit:

a) <u>Valve opening without modification:</u>

Used when the boiler circuit has fully forced circulation. This refers to boiler circuits where the circulation pump is connected directly in the boiler circuit or in bypass with a valve.

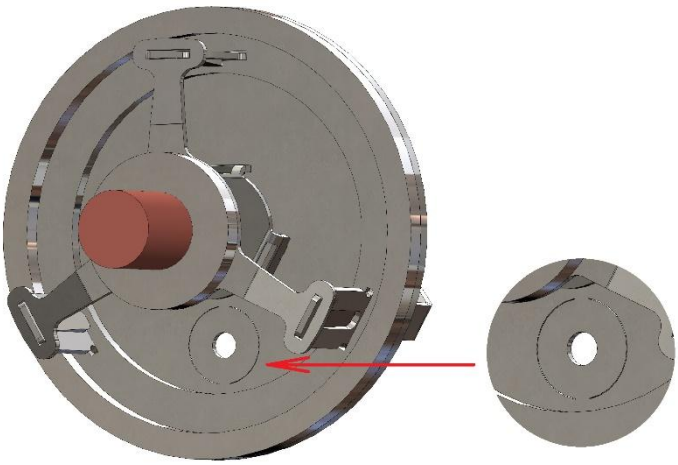

The flap with an opening without modifications is used in hydraulic diagrams no. 3, 4, 5, 6, 9 and 10 (see chapter 5.13).

b) <u>Valve opening with an enlarged cross-section:</u>

Tilt the target in the valve by 90° (for example, using a screwdriver).

Used when the boiler circuit has gravity circulation or with a pump that indirectly participates in the circulation of the boiler (by injector effect). This refers to boiler circuits without a circulation pump or with a pump in a bypass without a valve (with an injector).

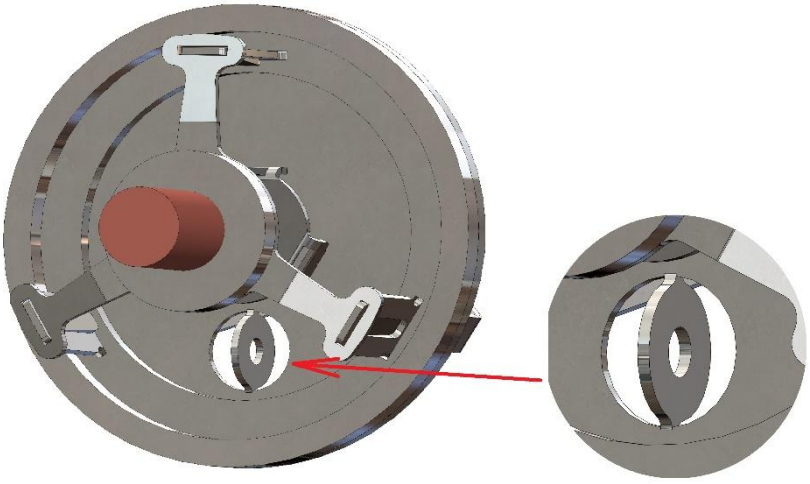

The valve with an enlarged cross-section is used in hydraulic diagrams no. 1, 2, 7, and 8 (see chapter 5.13).

5.12.2 Installation of the integrated-mixing thermostat

- Insert the integrated-mixing thermostat (item 1) into the 2 ½" socket on the rear wall of the boiler.
- Insert the pressure spring (item 2).
- Equip the reducer 2 ½" to 1 ½" (item 3) with threaded sealing and screw into the coupling.

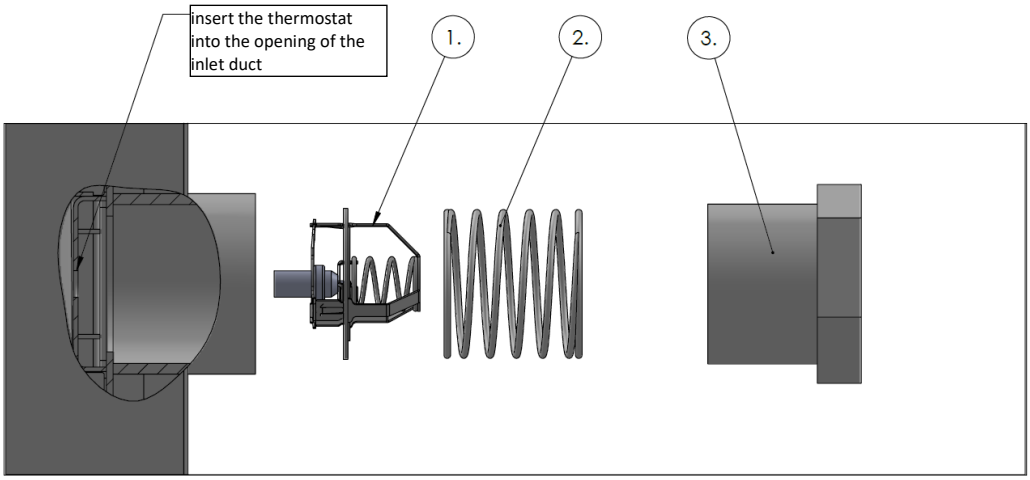

5.12.3 Size of the accumulation tank

The volume of the accumulation tank should allow for a discharged tank (i.e., cooled to 30–40 °C) to be capable of absorbing the energy of the entire fuel charge (heating by 50 °C) – see Table 7. If the volume of the tank is smaller, operating the boiler is more demanding (during the operation of the boiler, it is necessary to remove the appropriate amount of heat through the heating system, or it is not possible to load full amounts of fuel).

Table 7: Required volume of the accumulation tank

Boiler		BPC25	BPC40
Recommended minimum volume of the accumulation tank for softwood	[l]	750	1200
Recommended minimum volume of the accumulation tank for hardwood	[l]	1250	1850
Recommended maximum volume of the accumulation tank	[l]	2000	3000

In a gravity circulation setup "boiler – accumulation tank", it is necessary to increase the minimum accumulation volume by 10–20%.

We do not recommend a larger tank volume than the specified maximum due to disproportionate financial costs and significant heat loss.

5.12.4 Connection "boiler – accumulation tank" with gravity circulation (without pump)

Where the accumulation tank is located near the boiler, we recommend implementing the "boiler – accumulation tank" circuit using gravity circulation (without a pump, with larger-diameter pipes) – see connection diagram no. 1 (chapter 5.13.1). The acquisition costs are comparable to forced connection (the more expensive piping is offset by savings on the pump and accessories). The advantages of a gravity circulation setup are reliability and operational savings (in electricity) and maintenance-free operation.

The disadvantages of a gravity circulation setup are that the intensity of circulation (transmitted output) decreases proportionally with the charge of the accumulation tank, so at the end of charging the tank, the boiler cannot operate at full capacity (it achieves a charge of 80–90% of its capacity). We therefore recommend that, for a gravity circulation setup, the tank volume be 10–20% higher.

The gravity circulation circuit "boiler – accumulation tank" must be designed to transfer the nominal output of the boiler at a temperature difference of 90/60 °C. For example, this is achieved if the following conditions are met:

- The total length of the pipe is up to 4 m.
- Pipe bore 40 mm (including couplings connecting to the tank).
- The number of bends does not exceed 3 or the number of arcs does not exceed 6.
- The boiler and the tank are at least on the same height level (floor). The inlet to the tank is at least 50 cm (boiler up to 25 kW) or 80 cm (boiler 40 kW) above the outlet from the boiler. If the height of the ceilings allows, it is advantageous to place the tank higher (by 10 to 50 cm).
- If there is a backflow valve in the circuit, its pressure loss must be less than 0.3 mbar at nominal output and a temperature difference of 60/90 °C, (Kv < 3 m^3/h). For example, a gravity circulation valve specially developed for this type of boiler supplied by BLAZE HARMONY – see chapter 5.12.15. The standard horizontal valve (floating) is unsuitable due to high pressure loss.

Table 8: Conditions for a gravity circulation setup of a boiler with an accumulation tank

Model	A – minimum height of entry into the accumulation tank from the floor	Average pipe diameter between the boiler and the accumulation tank
BLAZE PRAKTIK COMBI 25	180 cm	6/4" (Cu 42 mm)
BLAZE PRAKTIK COMBI 40	200 cm	6/4" (Cu 42 mm)

- It is essential to adhere to the conditions for the gravity circulation setup.

5.12.5 Connection "boiler – accumulation tank" with forced circulation (with pump)

Where the location of the accumulation tank allows at least partial gravity circulation (the tank and boiler are positioned at the same height), we recommend placing the boiler circuit pump in the bypass branch – see connection diagram no. 2 (chapter 5.13.2).

The advantage of this setup is better integrated-mixing functionality and improved gravity circulation capability (the pump does not restrict the flow). The recommended pipe diameter is 26–33 mm (Cu 28–35). In this setup, the circulation is mostly gravity circulation. The pump activates only when the temperature in the boiler exceeds, for example, 85 °C. We recommend installing a pump with a lower power (approximately 25 to 40 W).

The backflow valve in this setup must allow for gravity circulation – see chapter 5.12.15.

Where the location of the accumulation tank does not allow for even partial gravity circulation (the tank is located far away or at a height below the level of the boiler), the boiler circuit pump is placed "directly" into the return pipe from the tank to the boiler – see connection diagrams no. 3 (chapter 5.13.3), no. 4 (chapter 5.13.4), and no. 5 (chapter 5.13.5). The backflow valve in this setup does not have to allow for gravity circulation.

5.12.6 Residual boiler output

The connection must be designed to ensure the removal of residual boiler output, for example, in the event of a power outage.

In the event of a power outage, the exhaust fan stops and the valve on the combustion air supply closes. This will limit the boiler's output as a result. The hot layer of fuel and the boiler lining still release heat for about 1 hour. To prevent overheating of the boiler, this residual heat must be reliably dissipated – see chapters 5.12.7 and 5.12.8.

The amount of residual heat is 5–10 MJ depending on the instantaneous output of the boiler and the fuel being burned.

5.12.7 The most suitable method for dissipating residual heat

If possible, we recommend connecting the boiler in such a way that the discharge of residual output is ensured by gravity circulation to the accumulation tank or to the heating system (see recommended connections). The standard circulation pump has a bore of approximately 3/4", which allows for sufficient gravity circulation to remove residual output. Any filters and backflow valves must not have excessive pressure loss ($\sum Kv \geq 10 m^3/h$).

In accumulation tanks with a volume of 1000 l, the residual output of the boiler causes a temperature increase in the tank of approximately 2 – 4°C.

5.12.8 Other methods of dissipating residual heat

If it is not possible to use gravity circulation to transfer residual heat to the heating system or accumulation tank, another method must be chosen, e.g.:

1. Connect an **automatic cooling system** (see chapter 5.14).
2. Connect the boiler with a gravity branch with a combined DHW storage tank that can accommodate excess thermal output during a power outage. The volume of the DHW storage tank should be at least 120 litres, with the residual output of the boiler causing its heating by 10 to 20 °C. Due to the risk of scalding, it is recommended to equip the outlet from the DHW storage tank with a thermostatic mixing valve or to use thermostatic faucets.
3. Use a **backup power source** for the circulation pump. It is necessary to use a sine wave source for the supply voltage.
4. Use a suitably connected **open expansion vessel**. In the event of a power outage, the excess power is dissipated by boiling.

5.12.9 Water

For filling the boiler, we recommend using soft water, free from mechanical impurities and chemically inactive. The designer may suggest suitable additives for the water in the heating system.

5.12.10 Open expansion vessel

If there is an open expansion vessel in the system, it must be positioned so that it does not freeze. Its oxygenation can be limited by a thin layer of oil on the surface. The volume of the expansion vessel must be at least 5% of the total volume of water in the heating system.

5.12.11 Connection of the boiler to an existing system

If the boiler is installed in place of another type of boiler and the existing mixing valve for return protection remains in the circuit, the overall functionality of the connection must be assessed in terms of residual heat removal, and a suitable safety device should be installed if necessary – see chapter 5.12.7 and 5.12.8. An integrated-mixing thermostat (original Blaze Harmony thermostat – see boiler schematic, item 33) is not installed in this case.

5.12.12 Connection of the boiler with an accumulation tank

If possible, it is more advantageous to have 1 large tank than 2 small ones. From an investment perspective, it is cheaper, has smaller footprint and thermal loss due to cooling from the surface, and the connection is simpler. In the case of two tanks, a branching connection is usually used (for uniform flushing), while for more than two tanks, the Tichelmann system is employed.

If necessary, it is possible to place the tank in another part of the building, or on another floor.

If there is no suitable space in the heated building, heating can be carried out from a nearby building (garage, workshop) that houses the boiler and usually also the tank. Ground pre-insulated pipes can be used to connect buildings:

The automatic air vent located directly on the top outlet of the tank can be a source of problems. The potential water leak is difficult to detect; moisture in the insulation can cause corrosion of the tank body.

We recommend connecting the outlet to the heating system to the top coupling of the tank; otherwise, at least 10% of the tank capacity will remain unused. This is not necessary for tanks that are equipped with an internal pipe as shown in the figure:

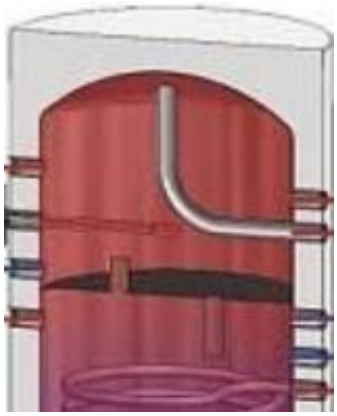

5.12.13 Connection of the boiler without an accumulation tank

The boiler can be connected to a system with forced or gravity circulation.

Connection without an accumulation tank is only possible if the installation meets the conditions in chapter 1.5.

5.12.14 Condition of non-disconnection of the system

In a setup without an accumulation tank, the heating system must be designed so that it can draw at least 50% of the nominal output of the boiler. For example, it is not possible to use a master regulator with a room thermostat or a system with thermal valves. Regulatory elements (valves of individual branches or elements) must not be closed in such a way that the capacity of the system to extract thermal output from the boiler is excessively reduced.

5.12.15 Gravity circulation valve BLAZE HARMONY

Usage:

The gravity circulation valve BLAZE HARMONY prevents back circulation in the circuit “boiler – accumulation tank”.

In the circuit “boiler – accumulation tank”, it is possible to install a valve that prevents the reverse circulation “accumulation tank-boiler” when the tank is heated and the boiler is not operating for an extended period. The thermal output that escapes into the boiler room is relatively small, as the air supply to the boiler is closed off by a valve during downtime (100 – 300 W depending on the temperature in the tank). In the boiler rooms located in the building, this heat is used for heating and thus a backflow valve is not needed.

Description:

The outer body of the valve consists of a welded steel body with access covers on both sides. The valve itself is housed in a “self-adjusting” blade bearing. The closing force of the valve itself is generated by the weight of an offset counterweight (gravitational principle). The valve, the bearing and the seating ring (seat) are made of stainless steel. The valve only operates in the position with the outlet directed vertically upwards.

Parameters:

Weight: 3 kg

Dimensions: 155 x 145 x 80 mm

Inlet: g 6/4" (external thread)

Outlet: G 6/4" (internal thread)

Pressure loss diagram:

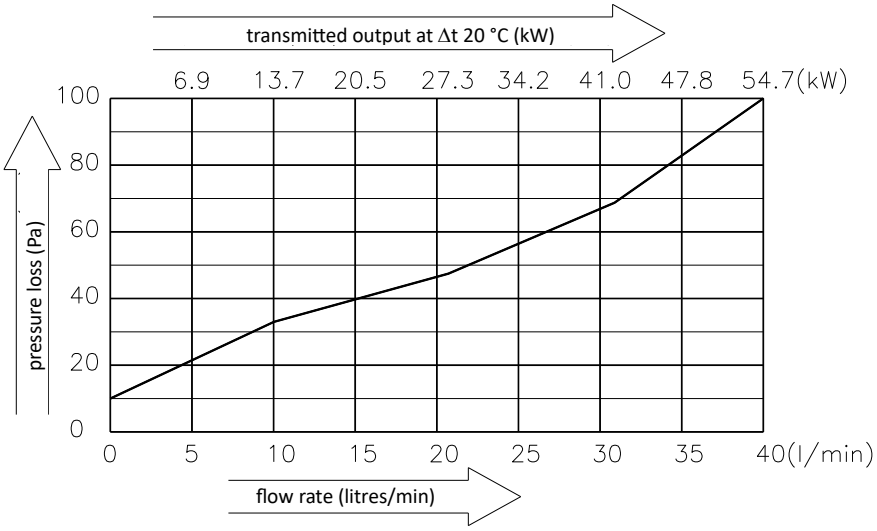

Diagram:

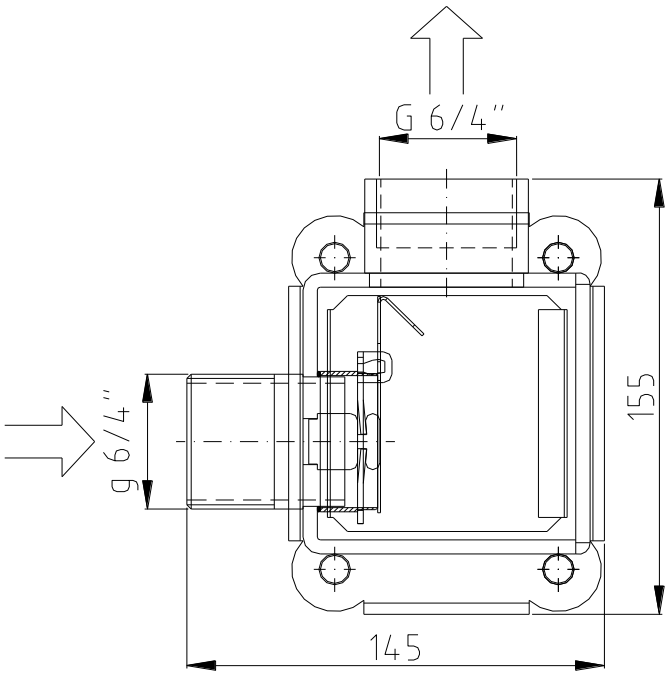

Installation:

1. The valve must be installed on the pipe so that its outlet points vertically upwards.
2. The valve can be connected directly to the outlet coupling from the boiler.
3. The valve can be installed on both the return and outlet pipes – see connection examples:

Connection to the boiler outlet pipe *Connection to the boiler inlet pipe*

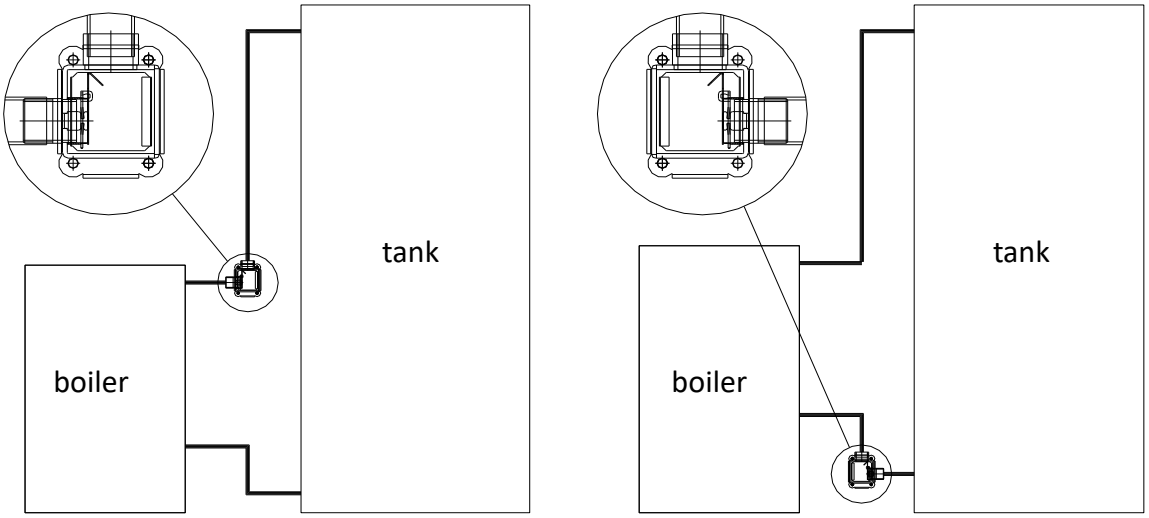

Maintenance, function check:

The valve requires no maintenance. The proper functioning is recognised by the fact that the boiler cools down after being turned off, even though the accumulation tank remains heated. If the boiler is heated by heat from the tank, we recommend draining the water, removing the valve cap, and checking whether any obstruction or foreign object is preventing the proper seating of the valve on the ring (seat). Alternatively, contact a service technician.

5.13 Hydraulic connection diagrams

All hydraulic connection diagrams displayed here are for informational purposes only and do not replace the heating project! This is prepared by a qualified heating system designer.

5.13.1 Connection diagram 1 – gravity circulation setup

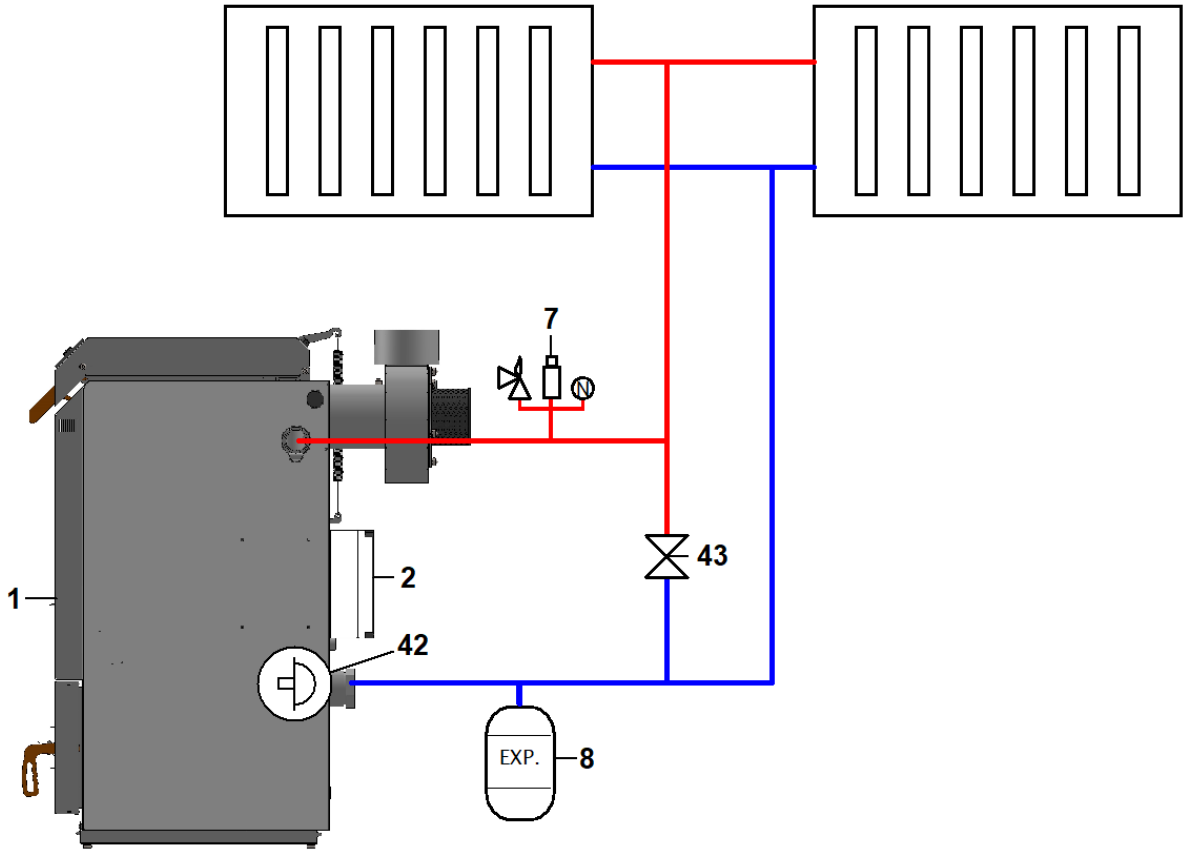

1 – BLAZE PRAKTIK COMBI boiler
2 – regulator
7 – safety group (vent valve, manometer, safety valve)
8 – expansion vessel
42 – integrated-mixing thermostat
43 – balancing ball valve

5.13.2 Connection diagram 2 – combined setup with a pump in a bypass with an injector

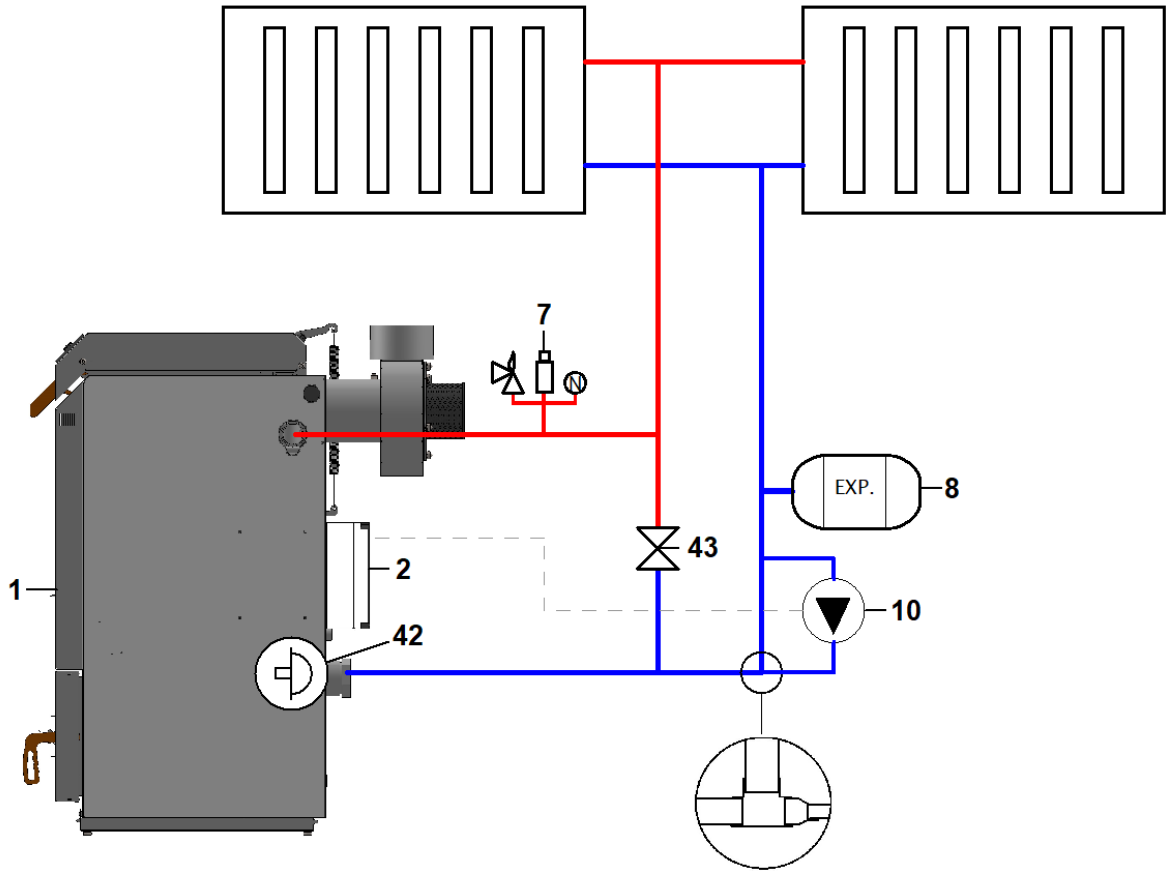

1 – BLAZE PRAKTIK COMBI boiler
2 – regulator
7 – safety group (vent valve, manometer, safety valve)
8 – expansion vessel
10 – boiler pump
42 – integrated-mixing thermostat
43 – balancing ball valve

5.13.3 Connection diagram 3 – forced setup with gravity circulation cooling into the heating system

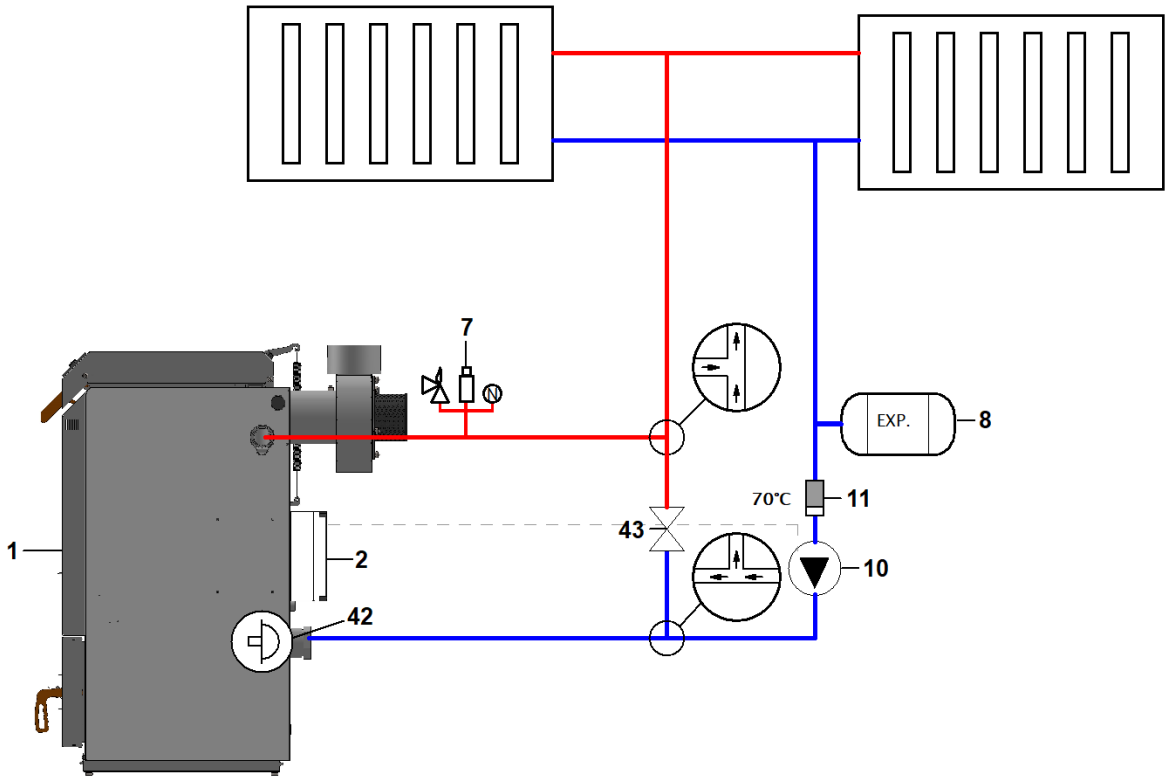

1 – BLAZE PRAKTIK COMBI boiler
2 – regulator
7 – safety group (vent valve, manometer, safety valve)
8 – expansion vessel
10 – boiler pump
11 – filter
42 – integrated-mixing thermostat
43 – balancing ball valve

5.13.4 Connection diagram 4 – forced setup with gravity circulation cooling into the DHW tank

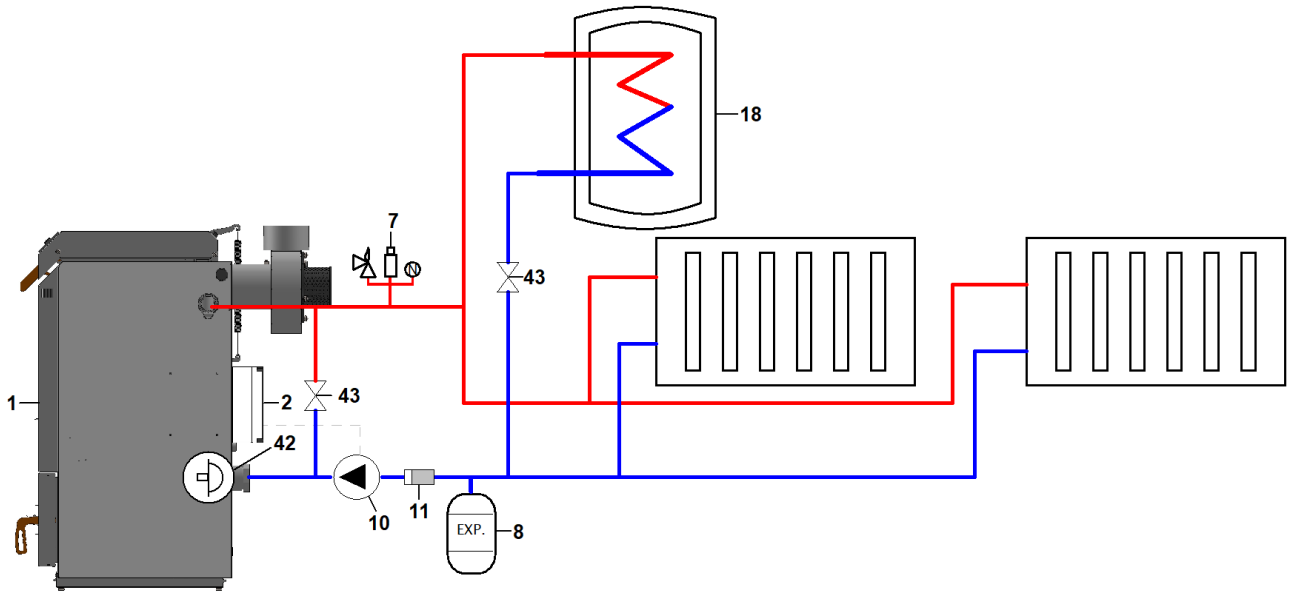

1 – BLAZE PRAKTIK COMBI boiler
2 – regulator
7 – safety group (vent valve, manometer, safety valve)
8 – expansion vessel
10 – boiler pump
11 – filter
18 – DHW storage tank
42 – integrated-mixing thermostat
43 – balancing ball valve

5.13.5 Connection diagram 5 – forced setup with emergency cooling

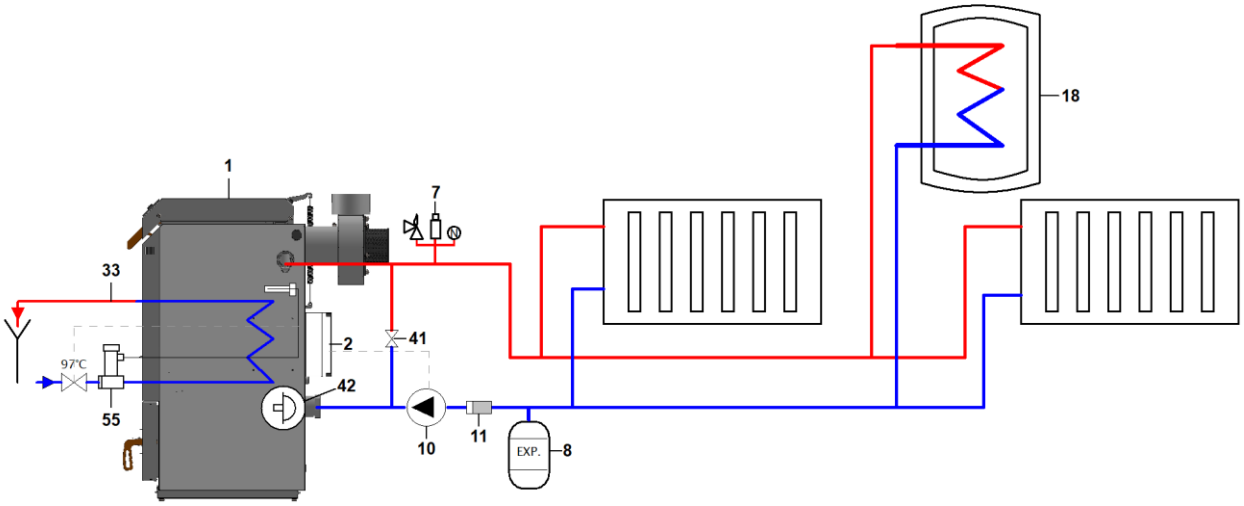

1 – BLAZE PRAKTIK COMBI boiler
2 – regulator
7 – safety group (vent valve, manometer, safety valve)
8 – expansion vessel
10 – boiler pump
11 – filter
18 – DHW storage tank
33 – automatic cooling system
42 – integrated-mixing thermostat
43 – balancing ball valve
55 – cooling thermostatic valve

5.13.6 Connection diagram 6 – forced setup with a thermostatic mixing valve and emergency cooling

Example of connection to an existing circuit where protection for the return line has already been implemented (e.g., with a loading device, a three-way thermostatic mixing valve, etc.). The integrated-mixing thermostat must be removed from the boiler.

Automatic cooling system (33) for the removal of excess heat connected.

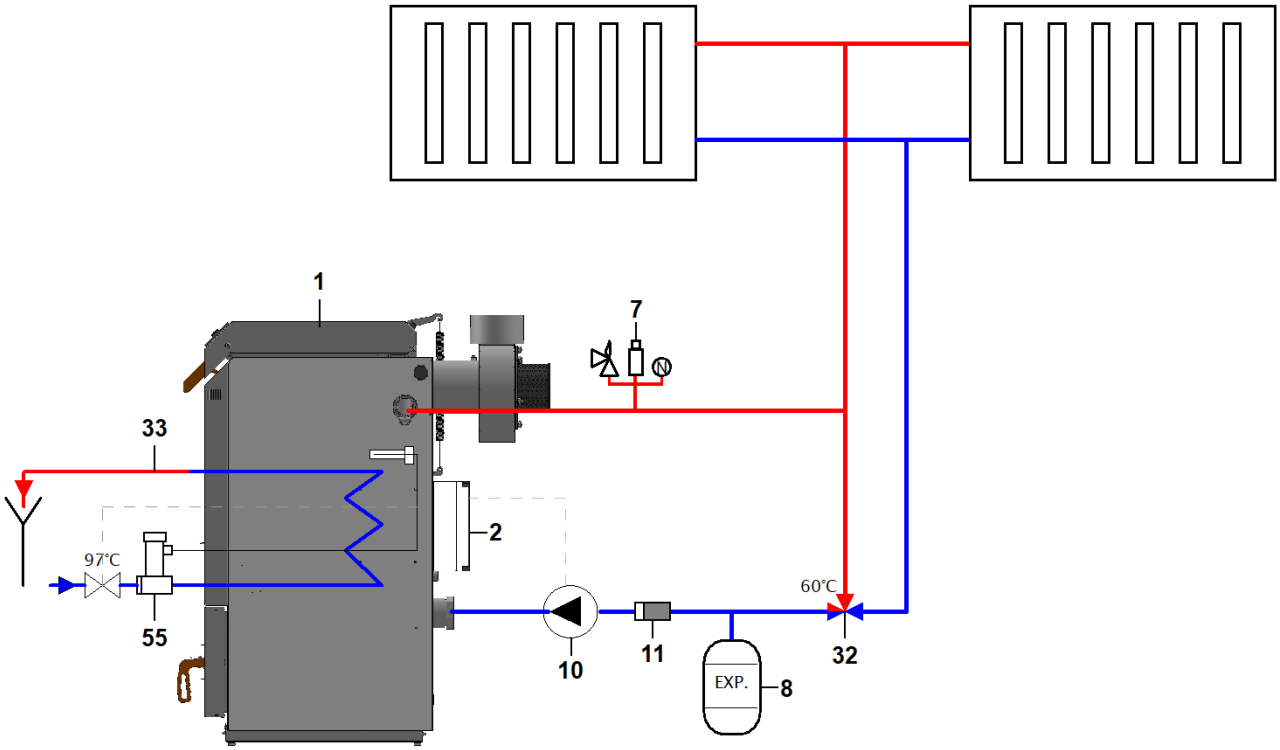

1 – BLAZE PRAKTIK COMBI boiler
2 – regulator
7 – safety group (vent valve, manometer, safety valve)
8 – expansion vessel
10 – boiler pump
11 – filter
32 – thermostatic mixing valve
33 – automatic cooling system
55 – cooling thermostatic valve

5.13.7 Connection diagram 7 – gravity circulation setup with an accumulation tank

Automatic cooling system for the removal of excess heat not connected.

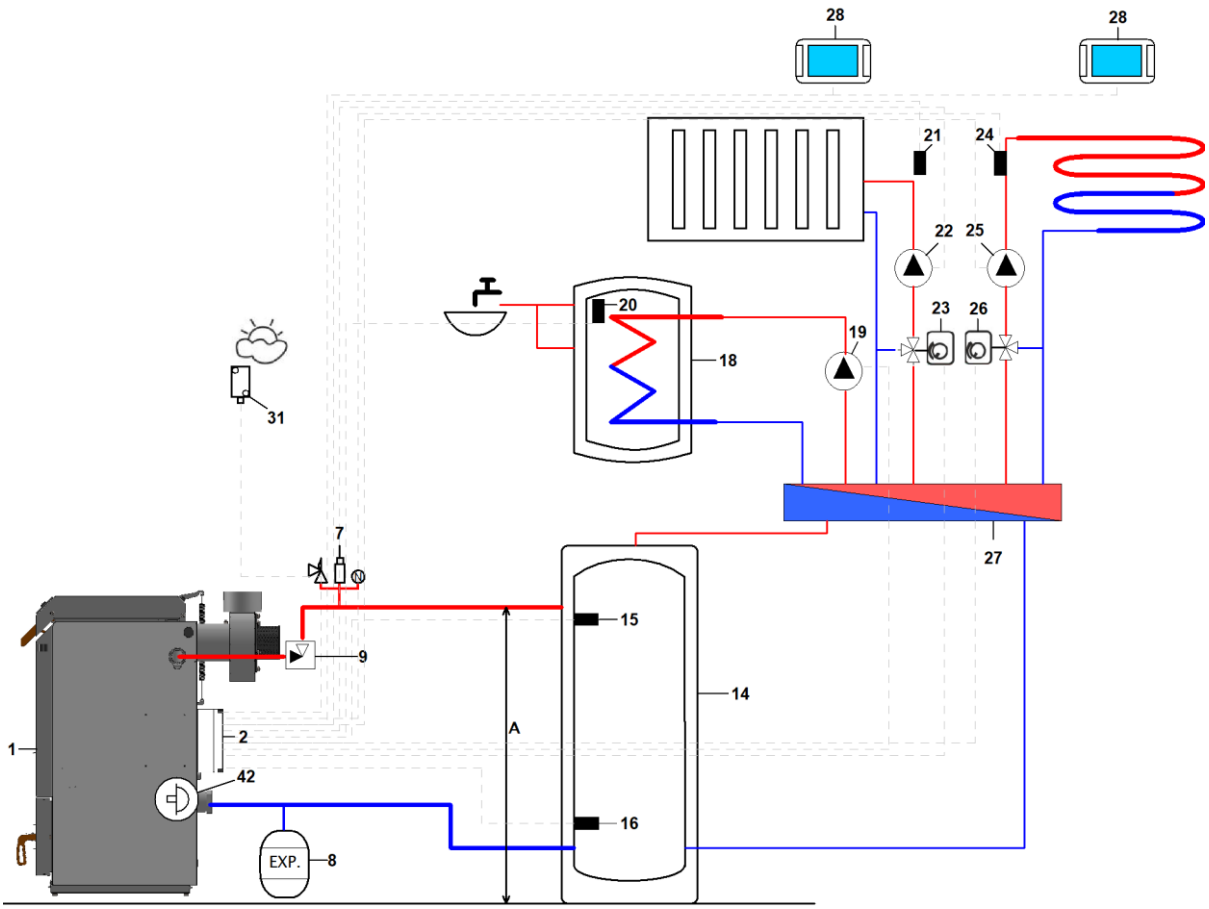

1 – BLAZE PRAKTIK COMBI boiler
2 – regulator
7 – safety group (vent valve, manometer, safety valve)
8 – expansion vessel
9 – special gravity backflow valve
14 – accumulation tank
15 – upper sensor of the accumulation tank (CT10)
16 – lower sensor of the accumulation tank (CT10)
18 – DHW storage tank
19 – DHW pump
20 – DHW temperature sensor (CT10)
21 – MIX 1 temperature sensor (CT10)
22 – MIX 1 pump
23 – MIX 1 mixing valve drive
24 – MIX 2 temperature sensor (CT10)
25 – MIX 2 pump
26 – MIX 2 mixing valve drive
27 – distributor
28 – room panel eSTER
31 – outdoor temperature sensor (CT10-P)
42 – integrated-mixing thermostat

Table of conditions for the gravity circulation setup of the boiler with an accumulation tank – see chapter 5.12.4.

5.13.8 Connection diagram 8 – combined setup with an accumulation tank with an injector

It is used where the conditions do not allow sufficient gravity circulation "boiler – accumulation tank". Gravity circulation is capable of charging the accumulation tank to only 50–70% of its capacity.

Automatic cooling system for the removal of excess heat not connected.

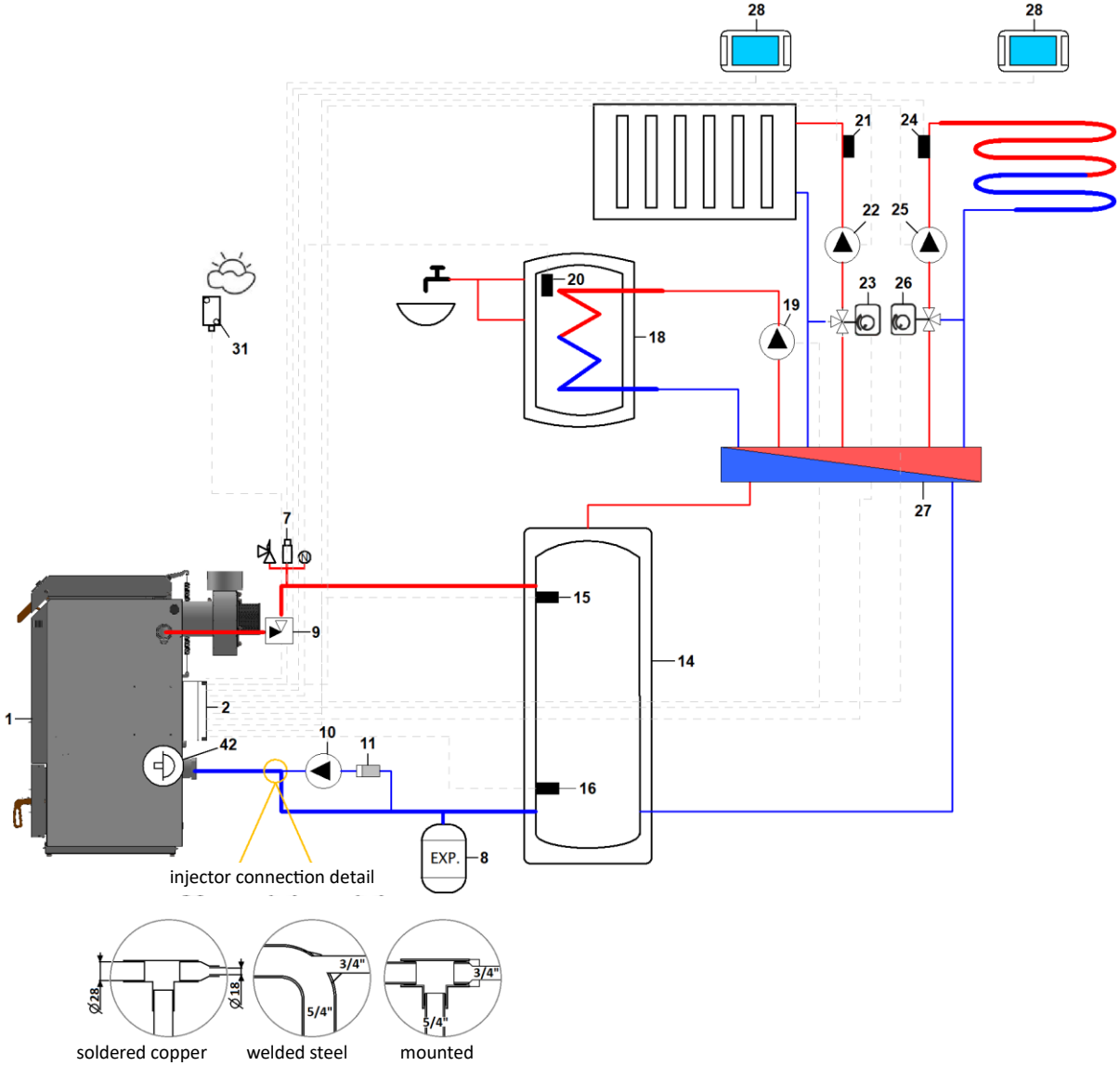

1 – BLAZE PRAKTIK COMBI boiler
2 – regulator
7 – safety group (vent valve, manometer, safety valve)
8 – expansion vessel
9 – special gravity backflow valve
10 – boiler pump
11 – filter
14 – accumulation tank
15 – upper sensor of the accumulation tank (CT10)
16 – lower sensor of the accumulation tank (CT10)
18 – DHW storage tank
19 – DHW pump
20 – DHW temperature sensor (CT10)
21 – MIX 1 temperature sensor (CT10)
22 – MIX 1 pump
23 – MIX 1 mixing valve drive
24 – MIX 2 temperature sensor (CT10)
25 – MIX 2 pump
26 – MIX 2 mixing valve drive
27 – distributor
28 – room panel eSTER
31 – outdoor temperature sensor (CT10-P)
42 – integrated-mixing thermostat

5.13.9 Connection diagram 9 – forced setup with an accumulation tank

It is used where conditions do not allow even partial gravity circulation "boiler – accumulation tank".

Automatic cooling system for the removal of excess heat connected.

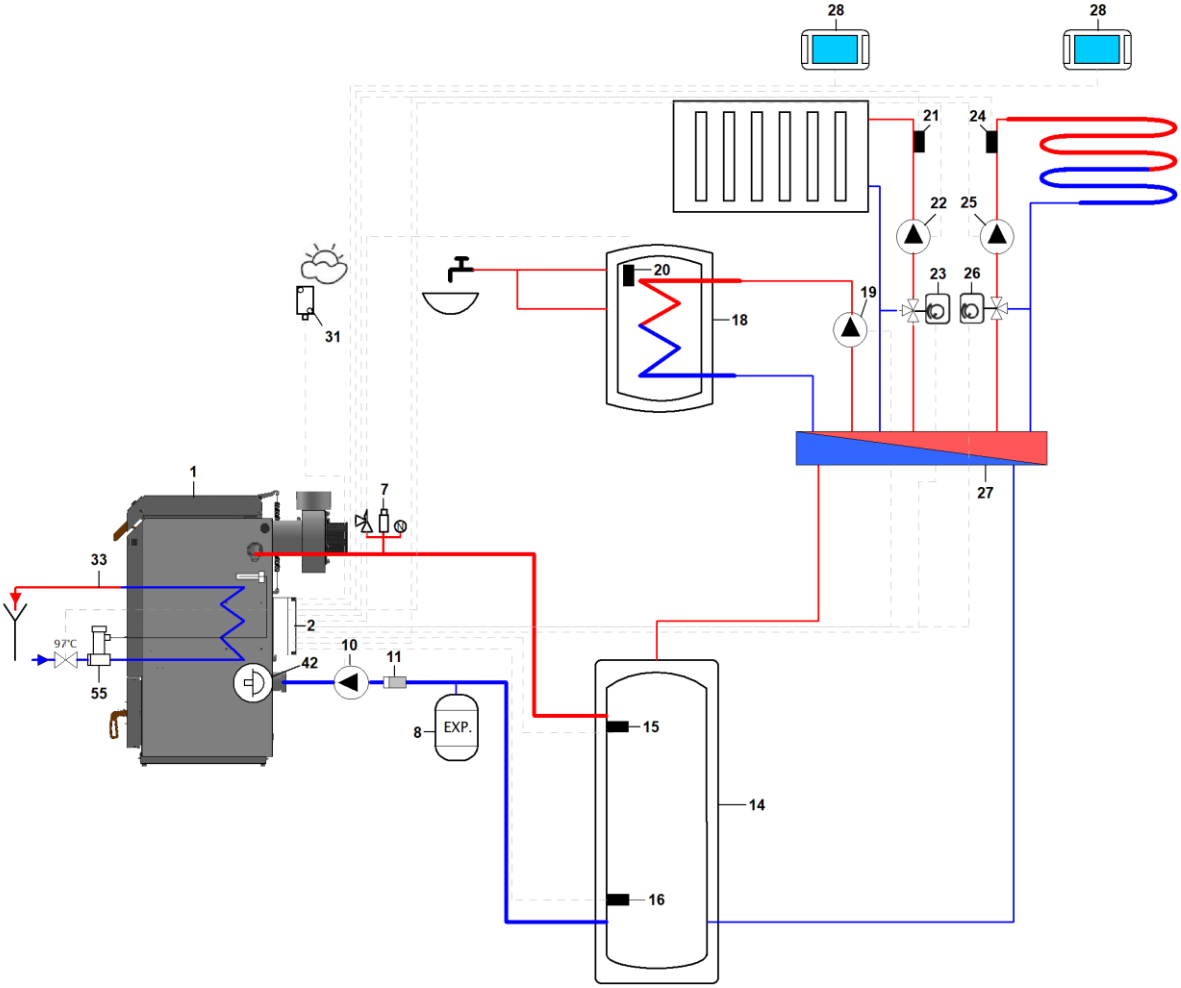

1 – BLAZE PRAKTIK COMBI boiler
2 – regulator
7 – safety group (vent valve, manometer, safety valve)
8 – expansion vessel
10 – boiler pump
11 – filter
14 – accumulation tank
15 – upper sensor of the accumulation tank (CT10)
16 – lower sensor of the accumulation tank (CT10)
18 – DHW storage tank
19 – DHW pump
20 – DHW temperature sensor (CT10)
21 – MIX 1 temperature sensor (CT10)
22 – MIX 1 pump
23 – MIX 1 mixing valve drive
24 – MIX 2 temperature sensor (CT10)
25 – MIX 2 pump
26 – MIX 2 mixing valve drive
27 – distributor
28 – room panel eSTER
31 – outdoor temperature sensor (CT10-P)
33 – automatic cooling system
42 – integrated-mixing thermostat
55 – cooling thermostatic valve

5.13.10 Connection diagram 10 – forced setup with a thermostatic mixing valve, accumulation tank and emergency cooling

Example of connection to an existing circuit where protection for the return line has already been implemented (e.g., with a loading device, a three-way thermostatic mixing valve, etc.). The integrated-mixing thermostat must be removed from the boiler.

Automatic cooling system (33) for the removal of excess heat connected.

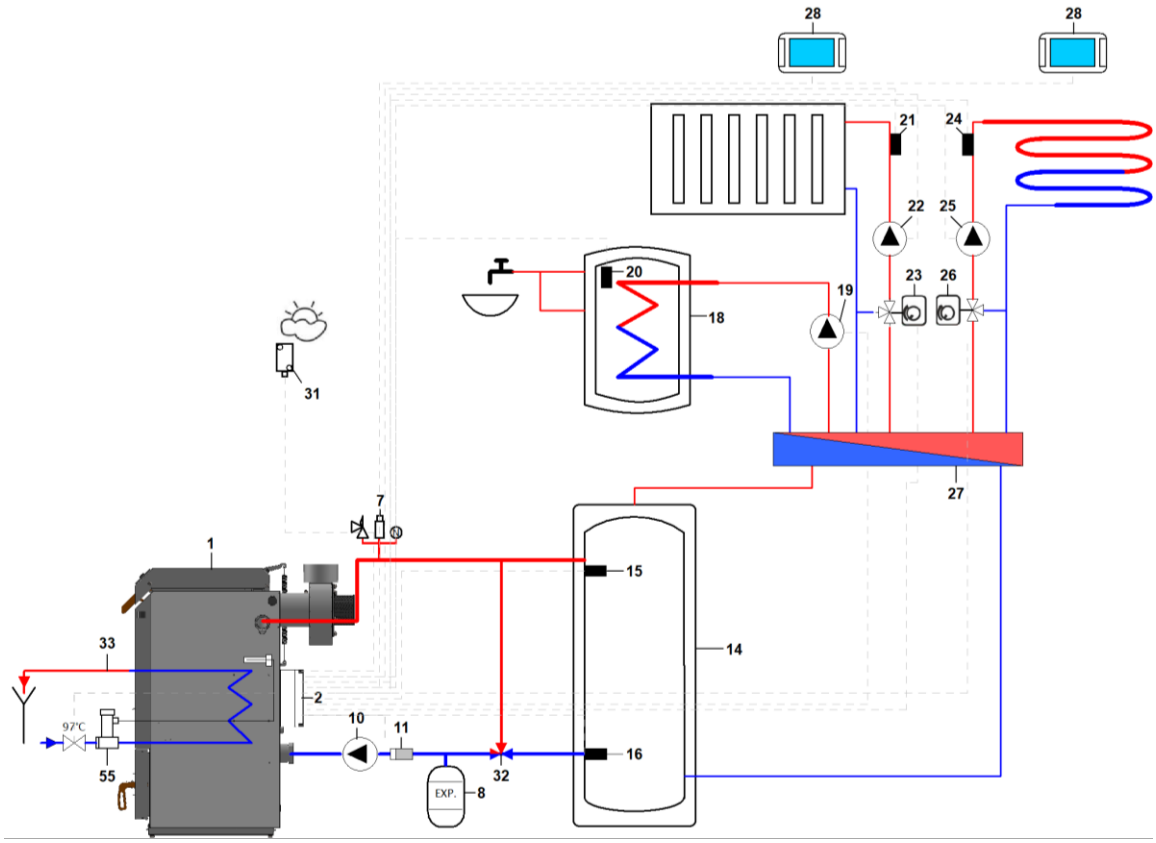

1 – BLAZE PRAKTIK COMBI boiler
2 – regulator
7 – safety group (vent valve, manometer, safety valve)
8 – expansion vessel
10 – boiler pump
11 – filter
14 – accumulation tank
15 – upper sensor of the accumulation tank (CT10)
16 – lower sensor of the accumulation tank (CT10)
18 – DHW storage tank
19 – DHW pump
20 – DHW temperature sensor (CT10)
21 – MIX 1 temperature sensor (CT10)
22 – MIX 1 pump
23 – MIX 1 mixing valve drive
24 – MIX 2 temperature sensor (CT10)
25 – MIX 2 pump
26 – MIX 2 mixing valve drive
27 – distributor
28 – room panel eSTER
31 – outdoor temperature sensor (CT10-P)
32 – thermostatic mixing valve
33 – automatic cooling system
55 – cooling thermostatic valve

5.14 Connection of automatic cooling

Cooling uses utility water from the mains with an inlet pressure of 2-4 bar and a temperature of up to 25 °C. A pressure reducing valve must be installed at higher pressures. The water supply must not depend on the supply of electricity, i.e., a domestic water pump cannot be used. As a safety valve for the cooling circuit, you can use, for example, WATTS STS 20 with an opening temperature of 97 °C.

Connect the cooling water inlet to the lower coupling (39) via the safety valve and the cooling water outlet to the upper coupling (37). The temperature sensor of the cooling fitting is screwed into the well (42). Connect the outlet of the cooling loop to the sewer, e.g. via a hose. We recommend installing a filter on the inlet of the cooling circuit.

If the water temperature in the boiler exceeds 97 °C, the safety valve will open and water from the mains will start to flow through the cooling circuit. The excess boiler output is thus discharged into the sewer.

WARNING!!! It is important to ensure the correct connection of the safety lock to the INLET of the cooling water to the heat exchanger.

The safety cooling heat exchanger MUST NOT be under constant pressure, otherwise it can be damaged.

5.15 Electric connection

Information on the electrical connection can be found in the separate operating and installation manual for the regulator, which is supplied with the boiler.

5.16 Burner settings before first start-up

Connect the boiler to the electrical network. On the regulator's display, the text *"Boiler off"* and the current time are shown.

5.16.1 Filling the fuel feeder with pellets

- Remove the flexible pipe with the connecting metal coupling (see chapter 4.4, items 6 and 7) from the burner and place it into a prepared container.
- Enter the menu: ***Service Settings -> Manual Control -> Feeder***
- Activate this function and wait until the feeder is completely filled with pellets.
- After filling the entire feeder, keep the feeder running for another 2–3 minutes to ensure it is fully filled along its entire length.
- Fit the flexible pipe with the metal coupling back onto the burner.

WARNING! Complete filling of the pellet feeder is essential for the successful ignition of pellets in the burner. Manual filling of the external feeder must be done before the first ignition or if the hopper was completely emptied during the last operation.

5.16.2 Fuel feeder calibration

- Before starting the calibration, make sure that the external feeder is properly filled with pellets – see chapter 5.16.1.
- Remove the end of the flexible pipe with the metal coupling (see chapter 4.4, items 6 and 7) from the burner and place it into a suitable container.
- Enter the menu: ***Menu -> Boiler Settings -> Settings – PELLET BURNER -> Feeder -> Feeder Performance Test***
- Start the test by selecting START. The feeder test takes 6 minutes. During this time, the pellets are fed continuously. At the end of the test, the feeder automatically turns off.
- Consider the net (!!!) weight of the pellets that the feeder delivers into the container during the test.
- Enter the menu: ***Menu -> Boiler Settings -> Settings – PELLET BURNER -> Feeder-> Fuel weight during performance test*** and enter this value here.
- Place the free end of the flexible hose back onto the burner.

If the fuel feeder calibration is not carried out thoroughly according to the given instructions, it may result in improper boiler operation. A different amount of pellets will be delivered to the burner than requested.

Fuel feeder calibration must be performed every time before using a new type of pellet or after changing the feeder angle from the hopper.

Detailed procedure and more information on calibrating the fuel feeder – see the regulator operating manual (separate document).

5.16.3 Fan performance settings

Fan performance settings are configured in:

Menu -> Boiler Settings -> Settings – PELLET BURNER

- The fan performance is set for 3 levels: for the minimum, medium, and maximum burner output.
- The exhaust fan parameters are factory preset, but depending on the type of chimney, pressure losses, etc., it is sometimes necessary to fine-tune these settings.
- The ideal solution for this installation is to set the fan using a flue gas analyser (by measuring CO emissions).
- Another way can be a visual test, where during stable burner operation (after at least 1 h of burner operation) you evaluate the colour of the smoke coming out of the chimney:
    - grey to black – sign of air shortage during combustion – increase exhaust fan power.
    - invisible – flue gases flying out of the chimney cause air shimmering – the gas moisture is above the dew point – the exhaust fan is set correctly.
    - white – this is the result of vapour condensation, which means that the CO level is low – the exhaust fan is set correctly.
- A sign of correctly set combustion parameters is also a non-odorous, pale yellow flame emerging from the burner's combustion chamber.

6 Boiler operation by the user

To ensure the reliable and safe operation of the boiler, the operator must strictly follow the instructions provided in this boiler operating manual and in the operating and installation manual for the regulator (separate document).

6.1 First commissioning

When the boiler is first put into operation, the surfaces of the heat exchange areas are metallically clean, leading to more efficient heat transfer. As a result, the temperature of the flue gases is lower than what corresponds to the standard condition.

Because the boiler regulator calculates the output value based on the temperature of the flue gases, it results in the actual output of the boiler being approximately 50% higher when it is first ignited than what is set on the regulator.

The duration of the fuel combustion is correspondingly shorter as a result. Within 2 to 5 operating days, the heat exchange surfaces will be covered with a standard layer of deposit, and the displayed value on the screen will correspond to reality.

When first commissioning, we recommend setting the desired output to 50% and the maximum water temperature to at least 90 °C.

The above-described fact is not a defect.

6.2 Ignition

Before ignition, it is necessary to check and, if necessary, secure:

- Ensure that the heated building (possibly along with the accumulation tank) takes in the produced heat (see chapter 5.12.6).
- Functionality of the heating system (circulation pumps, water quantity, water pressure, bleeding, provided there has been no freezing, …).
- Tightness of the upper and lower doors.
- Functionality of flue pipes (condition, tightness, …).
- Functionality of the loading chamber and combustion chamber (condition, correctness of the assembly of ceramic tiles, …).
- Make sure the side and rear heat exchanger and the combustion and loading chamber are not excessively clogged.
- Make sure there are foreign objects in the boiler.
- Functionality of the boiler and heating system control and safety elements (safety valves, water boiler regulator, thermostats, ...).
- Connection of the boiler to the mains (230V/50Hz).

Link to video – first ignition

To ignite the boiler, proceed as follows:

1) Lift the door handle and wait a few seconds for the exhaust fan to reach full speed.
2) If there are enough charred residues at the bottom of the boiler (at least 20 cm), usually it is sufficient to light a piece of paper and toss it onto the layer of cinder. Then add a few pieces of fuel. This ensures that the flames do not shoot upwards, but flow over a layer of cinders, igniting them.
3) If there is not a sufficient layer of cinder residues at the bottom of the boiler, place smaller logs in the loading chamber. Lay them out so that there are gaps between them (intersecting with each other). This layer should approximately fill the lower narrowing part of the loading chamber. On this layer, stack small chips or wood shavings. Place a lit crumpled paper on the chips. It is advisable for the paper to cover the entire surface of the inserted fuel. Then add more logs to the lit paper so that the flames do not shoot upwards, but downwards through the layer of wood.
4) Close the upper door so that it remains ajar by 1 to 2 cm. You can achieve this by closing the door with the closing handle pressed down. Let it blaze for about 5 minutes as needed.
5) When you make sure that the fire has ignited (by looking through the sight glass or judging by the rise in flue gas temperature), load the boiler with fuel (see chapter 6.3) and properly close the door. If properly ignited, the boiler will reach its nominal output in approximately 30 minutes. If the flame is extinguishing or flickering, it is possible to briefly open the top door to rekindle it.

After ignition, the regulator maintains the boiler's output at a higher level to ensure the fuel burns sufficiently and the lining heats up. Then it automatically switches to the value set by the operator.

It is prohibited to use flammable liquids for ignition. During operation, it is prohibited to exceed the nominal output of the boiler by any unacceptable means.

No flammable objects must be stored near the boiler. Ash must be stored in non-combustible containers with lids.

Especially before the first operation of the boiler, but also after its cleaning, check the correctness of the assembly of ceramic parts in the combustion chamber. Incorrect assembly worsens the quality of combustion, leading to excessive fouling of both the boiler and the chimney. It is also important to place the plugs under the rear tiles, otherwise, the boiler may be damaged.

6.3 Refuelling

1) Lift the handle of the upper door and wait a few seconds for the fan to reach full power and extract any wood gas from the loading chamber. After ensuring that there is no thick smoke in the loading chamber and that it cannot suddenly ignite, you can fully open the loading door.
2) Fill the loading chamber with fuel. If the base layer is thin, put several smaller pieces of fuel on it.
3) Close the upper loading door. The regulator automatically switches to IGNITION mode or OPERATION mode after 2 minutes (default setting), depending on the current flue gas temperature.
4) If no flame appears in the combustion chamber or it goes out after a while, slightly reopen the upper door and let the fuel ignite for a few minutes.

Do not poke or compress the hot base layer to avoid clogging the nozzle.

Place the **logs** in the loading chamber tightly together so that there is as little free space between them as possible. The first logs should be smaller so that the fuel ignites more easily. The last logs should be smaller again, as they break down better into the base layer.

You can prevent **smoking during loading** by only loading when the previous batch of fuel has burned down to the point where there are only glowing ember remnants in the loading chamber – the base layer.
It is possible to refuel by initially opening the loading door only partially and adding just 3 to 4 logs. This covers the hot layer and does not release as much smoke. Then open the door completely and add more fuel.
If smoke is released into the boiler room when refuelling, check whether the flue gas path (flue pipe, chimney) is blocked and whether there is sufficient air supply to the boiler room. When refuelling, you can open the window in the boiler room.
After closing the loading door, clean the rear heat exchanger by moving the turbulator lever. Always move the turbulator levers to both extreme positions. Leave the lever in the lower position (unless it descends on its own due to the weight of the turbulators). Clean the heat exchanger using the lever after each loading.

Do not open the lower door while the boiler is in operation. The combustion will be interrupted, and there is a risk of smoke releasing into the boiler room.

6.4 Amount of loaded fuel, refuelling intervals

Normally, you should fill the whole loading chamber when refuelling. **If the heat consumption by the heating system is low and the accumulation tank is warmed up, it is necessary to extend the refuelling intervals or add smaller amounts of fuel.** However, we do not recommend loading less than half of the volume of the loading chamber. With a small fuel dose, the burning time may be shortened so much that a quality stable ember level function cannot be established. The residual fuel is then not completely carbonised and smoulders. If using a smaller fuel load, turn off the automatic stable ember level function.

Do not refuel if the accumulation tank is full and unable to absorb the released heat! There is a risk of overheating and emergency shutdown of the boiler.

If the heating system were unable to absorb the heat from the fuel charge, it would lead to overheating (water temperature above 95 °C) and an emergency shutdown of the boiler with unburnt fuel. Unburnt fuel smoulders during the shutdown, and the flue gas and air paths of the boiler become clogged with moisture and tar. This threatens proper functioning, reduces the lifespan of the boiler and chimney, and pollutes the air.

Overheating may cause the turbulators to become blocked with tar.

The time the boiler spends in the overheated state is recorded and stored in the regulator's memory. If it exceeds 200 hours, the warranty on the boiler will be void.

Stable ember level shutdown occurs when only the basic hot ember layer remains in the loading chamber.

6.5 Setting the desired boiler output

The boiler output can be controlled by two parameters, which are set on the regulator:

- Maximum water temperature in the boiler (70 – 95°C)
- Required output – WOOD GASIFICATION (30 – 100 %)

We recommend setting the parameter *"Maximum water temperature in the boiler"* to 95°C and regulating the boiler output by adjusting the parameter *"Desired output – WOOD GASIFICATION"*.

Do not operate the boiler at a higher output than necessary! It unnecessarily shortens the operating time and prolongs the downtime. Parameter *"Required boiler output – WOOD GASIFICATION"* is recommended to be set to a value between 50 and 70%, and if the output is insufficient during higher heat consumption (in winter), it should be increased as needed.

The regulator always primarily maintains the set boiler output. If the requested boiler output is too high and the water temperature rises to the "Maximum water temperature in the boiler" value, the regulator will automatically start to reduce the boiler output.

6.6 Automatic stable ember level function

The boiler is equipped with a function called stable ember level, which allows the exhaust fan to be switched off even before the fuel charge has completely burned out. The boiler will retain a hot base layer for another 6 to 10 hours, so there's no need to rekindle it. The detection of burnout to the basic layer is ensured by a movable detection arm in the front wall of the loading chamber. This arm is pressed against the wall by the fuel after refuelling. During operation, the fuel level gradually drops and the arm is gradually exposed. When the fuel level drops below the end of the detection arm, the arm releases and, under the influence of the counterweight, tilts into the loading chamber. This activates a sensor in the air distribution panel, which informs the regulator that the boiler contains a base layer at the maximum set size (100%).

A red log of wood will appear on the regulator display in the section with information about the boiler's output. If the parameter *"Stable ember layer size"* is set to 100%, the regulator will shut down the boiler for a stable ember level shutdown immediately after the detection arm tilts. If the size of the stable ember layer is set to a lower value (90 to 10%), the boiler continues to operate in the OPERATION mode for some time to allow part of the residual fuel to burn out and the stable ember layer to reach the desired size. During this burning-out, the wooden log symbol on the display flashes.

After subsequent refuelling, the detection arm is once again pressed against the wall by the fuel, and the colour of the wooden log on the display changes to yellow, then later to green.

Opening the loading door causes the pressing mechanism linked to the door to press the detection arm against the wall of the loading chamber, ensuring it does not obstruct the refuelling process. Closing the door releases the pressing mechanism's detection arm again.

Opening the loading door for more than 10 seconds (adjustable parameter) in STOP mode will switch the system to IGNITION mode. If no new fuel is added, the remaining base layer of charcoal will burn out. Therefore, only glance into the boiler briefly.

Stable ember level shutdown of the boiler can occur only after 30 minutes (adjustable parameter) after refuelling. During this time, the log on the screen is displayed in yellow – see the image below. This function prevents the boiler from shutting down unintentionally during ignition when there is only a small layer of fuel in the boiler.

Green – there is fuel in the boiler, the minimum operating time **has been** reached.

Red – there is no fuel in the boiler.

Yellow – there is fuel in the boiler, the minimum operating time has **not** been reached.

Colour indication of fuel

The size of the base layer can be set as a user parameter on the boiler regulator.

The optimal base layer should roughly fill the lower tapering part of the loading chamber. The base layer must not contain smouldering fuel residues, as these clog the boiler with tar during downtime.

The boiler is equipped with a "MAINTENANCE MODE" function that ensures the base layer remains hot during shutdown, so ignition is not necessary when refuelling. This function switches the exhaust fan on at regular intervals in STOP mode. The intensity of the MAINTENANCE MODE can be adjusted. For longer shutdowns (over 8 hours), we do not recommend using this feature as it significantly reduces the size of the base layer (for ignition, a sufficient base layer, even if extinguished, is more valuable than a small layer, even if glowing).

If the stable ember level function is turned off (the log symbol does not appear on the display), the boiler will shut down only after the fuel has completely burned out and the flue gas temperature falls below the set value (service parameter).

6.7 Combustion control by the lambda sensor

The BLAZE PRAKTIK COMBI series boilers are equipped with a lambda sensor that measures the amount of residual oxygen in the flue gases (7 to 9%). Based on this information, the regulator controls the drive of the sliding shutter for the pre-drying, primary, and secondary air, ensuring continuous optimisation of the combustion process in the boiler.

Under normal circumstances, the customer does not engage in the regulation of combustion air. Everything operates automatically using a lambda sensor, a regulator, and an electric actuator for the combustion air sliding shutter.

6.8 Boiler cleaning

The removal of ash from the boiler is carried out either when cold or after turning off the boiler, detecting the fuel before subsequent refuelling. Regular cleaning of the boiler will achieve higher efficiency and thus lower fuel consumption. For more comfortable cleaning, an ash vacuum cleaner can be used. Ash must be stored in non-combustible containers with lids. When cleaning, we recommend keeping the exhaust fan on (lifting the door handle will cause the fan to run at full power after a few seconds).

The standard equipment of the boiler includes the following cleaning tools:

1.	2.
Rake	**Hook**

Tube heat exchanger:

The boiler is standardly equipped with mechanical turbulators, which are used for cleaning the rear flue gas exchanger. Clean after each loading and closing of the loading doors by moving the turbulator lever. Always move the turbulator levers to both extreme positions. Leave the lever in the lower position (unless it descends on its own due to the weight of the turbulators). Clean the heat exchanger using the lever after each loading.

Improper combustion leads to excessive fouling of the heat exchanger and there is a risk of blockage (solidification) of the turbulator. It can be very laborious to restore operation. It requires opening the heat exchanger cover, removing the movable comb body, pulling out the individual turbulators, cleaning them, and then reassembling them.

If the turbulators are moving stiffly and the lever movement is laborious, it is evidence of poor combustion. The usual cause is operator error, see chapter 6.12.

Loading chamber:

At least once a week, it is necessary to check whether an excessive layer of ash has accumulated at the bottom of the loading chamber. This is particularly risky with fuel that has a high proportion of bark or impurities of waste material. Excessive ash build-up can restrict the lower openings of the primary air supply (just above the funnel bottom) and thus affect the proper operation of the boiler.

If the accumulation of ash exceeds 2cm in the loading chamber, it must be broken up with a rake and pushed into the combustion chamber. In the case of more ash-forming fuels, we recommend turning off the stable ember level function as needed (e.g., once a week), allowing the fuel to burn out completely, and removing the ash deposits from the bottom of the loading chamber.

The slightly roughened surface of the tiles (up to 5mm) caused by small ash deposits is not a defect.

There is no need to clean the side walls, the hinged smoke screen and the loading door. The possible accumulation (of soot and dry tar) is not a drawback. Check whether the intake openings for the pre-drying air in the upper part of the loading chamber's front wall are blocked.

Video link – cleaning loading chamber and door

Lower combustion chamber:

Cleaning of the combustion chamber is carried out through the lower door using cleaning tools “Rake” and “Hook”. Every 2 weeks it is necessary to remove the exchanger plug (see Boiler schematic, item 41) and clean the bottom of the combustion chamber including the area under the tube exchanger.

Procedure for cleaning the combustion chamber:

- Remove the plug from the heat exchanger.
- Using a rake, remove (scrape off) deposits from the side walls of the combustion chamber above the tiles and above the lower door (from the metal walls of the boiler body).
- Then, using a hook, clean (scrape) the space behind the rear tiles (when cleaning, it is necessary to press the hook’s strip back against the metal wall of the body and move the hook sideways).
- Carefully rake any deposits on the ceramic tiles of the combustion chamber and the door insulation greater than 1 cm.
- If clogged, clean the opening and the sight glass.
- Use a rake to remove the deposits from the area under the heat exchanger and from the bottom of the combustion chamber.
- Place the heat exchanger plug back in its original position.

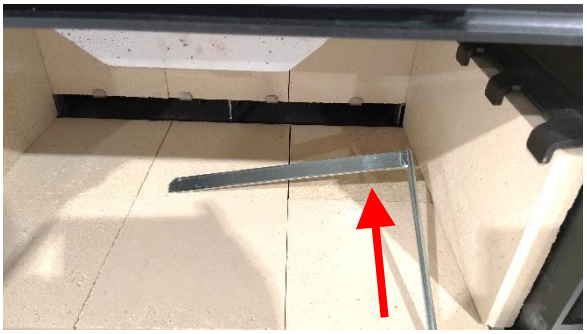

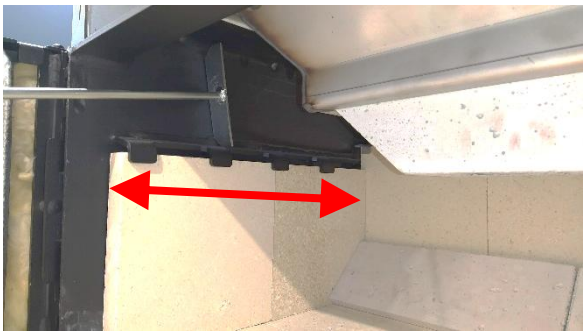

Link to video – Cleaning of the combustion chamber:

Exhaust fan:

The cleaning of the exhaust fan should be carried out at least once a year or in case of increased noise. Cleaning is carried out with a spatula and a wire brush.

Procedure for cleaning the exhaust fan:

- Disconnect the supply cable from the exhaust fan.
- Unscrew the 4 nuts and remove both flanges (semi-circles) of the exhaust fan.
- Remove the motor with the propeller from the body of the exhaust fan.
- Scrape off the deposits from the inner walls of the exhaust fan.
- Remove (vacuum) the loose ash and deposits from the body of the exhaust fan.
- Remove the propeller from the exhaust fan motor. **WARNING! The propeller blade of the fan has a left-hand thread!**
- Carefully clean the fan blades and the motor flange with a wire brush and a spatula.
- Reassemble the exhaust fan in the reverse order.

Link to video – Cleaning of the exhaust fan:

It is recommended to replace the start capacitor on the exhaust fan once a year. Only an authorized person (service technician) may perform this replacement. The boiler must be disconnected from the mains power supply at that time!

Regular cleaning and maintenance of the boiler is essential to maintain its long lifespan. If the boiler is not cleaned regularly and properly, there is an increased thermal stress on all parts and there is a risk of damage. The warranty does not cover damage caused by neglected maintenance of the boiler!

Wood ash from the prescribed fuel shall be handled in accordance with applicable local regulations. Any use of wood ash as a soil amendment or fertiliser must comply with the applicable requirements for its composition and use.

6.9 Burner cleaning

One of the reasons for the fuel not igniting in the burner may be a layer of baked-on minerals on the walls of the rotary hearth. If you are unsure about the quality of the pellets used, clean the combustion chamber more frequently. We recommend cleaning it with a wire brush or a small spatula.

A common cause of mineral buildup on the furnace walls is turning off the boiler by directly disconnecting it from the electrical supply. Smouldering pellets without air access cause them to stick to the hot walls of the combustion chamber. After it is put back into operation, intense soot formation occurs due to the limited supply of combustion air.

When putting the boiler out of operation, it is therefore necessary to turn off the boiler using the regulator, which will controlledly carry out the extinguishing mode.

The scope and intervals of burner maintenance are described in detail in the "Burner Service Book".

6.10 Taking the boiler out of service

When taking the boiler out of operation for an extended period, we recommend cleaning its heat exchange surfaces and removing ash from the boiler (see chapter 6.8).

Once per heating season, we recommend removing all tiles from the combustion chamber, cleaning the boiler walls, and sweeping out the ash. When reassembling, we recommend turning all tiles so that they are exposed to heat on the opposite side. Their lifespan will be extended.

6.11 Operational checks and maintenance

Boiler and heating system

The owner is obliged to continuously monitor the equipment and ensure its necessary maintenance. No special qualifications are required for this activity; training during the commissioning of the boiler will suffice.

It is necessary for the boiler to be periodically checked by the operator during operation. It is especially important to monitor that the temperature of the outlet water does not exceed 95 °C. Additionally, it is necessary to check the amount (pressure) of water in the system.

It is necessary to continuously check the condition of the ceramic tiles and the sealing of both doors.

Chimney and flue pipes

It is necessary to check the tightness and sooting of the flue pipe and the clearance of the chimney flue. During operation and cleaning, a layer of ash accumulates in the chimney. It is necessary to remove it through the chimney door in such a way that the chimney flue does not become blocked (at least once per season).

The leakage of joints in the flue pipe and chimney door can be eliminated with sealant or aluminium tape.

Door tightness

Regularly check the tightness of the door. The edges of the loading openings must be slightly pressed into the sealing cord. Sealing is carried out by replacing the sealing cord. The tightness (correctness of seating) is recognized by the smoothly imprinted edge of the sealing surface of the boiler body in the cord. If it is rough and covered with a deposit of soot and tar, it indicates a leak. This is particularly the case with the sealing cord of the loading door.

Lambda sensor

After the heating season, remove the lambda sensor from the exhaust fan and clean it of any dirt with a dry soft cloth. Do not use any cleaning agents! Then calibrate the lambda sensor according to the boiler regulator's operation and installation manual.

Before handling the lambda sensor, make sure the boiler is disconnected from the mains power supply!

6.12 Poor combustion, frequent operator errors

Poor combustion is manifested by foul-smelling smoke, excessive fouling of the flue gas exchanger or possibly the flue pipe, lower output, and increased fuel consumption. The cause is usually improper operation, e.g.:

- **Incorrect ignition in a clean boiler:** We recommend filling the funnel with pieces of fuel (well-dried, ideally hard) so that after ignition and closing the door, the flame remains stable. The flame may weaken, but it must not flicker or go out.
- **Inappropriate fuel:** Large logs and significant gaps between them, excessive moisture in the fuel. In particular, softwood ignites more poorly and requires to be dry, split (up to about 15 cm). Too long pieces may get stuck in the loading chamber. Maximum log length – see chapter 3. Do not place large pieces of wood on the bottom of the loading chamber, as they will not break down in time and will get stuck above the funnel. Do not place large pieces on top of the load, as they will not have time to create a stable ember level and will smoulder after being removed. We recommend arranging irregular pieces with minimal gaps between them.
- **Insufficient fuel supply:** We always recommend a full load of fuel. A half dose burns briefly and struggles to create a quality stable ember level.
- **The boiler output is set too low:** Especially when combined with a clogged boiler or unsuitable fuel.

- **Operation with a clogged boiler:** Excessive amounts of ash in the combustion chamber and the flue gas exchanger are undesirable. It is necessary to regularly clean the metal walls of the flue gas paths and the combustion chamber – see chapter 6.6. Consider the turbulator clogging as a valuable warning that something is wrong with the boiler operation.
- **Fuel supply in a state where the required heat consumption is not ensured:** The building, or possibly the accumulation tank, does not absorb heat from the fuel charge and will result in the shutdown with smouldering fuel. Before refuelling, it is necessary to determine the free capacity of the tank (e.g. the limit temperature in freezing temperatures is approximately 60 °C, at outdoor temperatures above 0 °C approximately 50 °C).
- **Inappropriate intervention in boiler operation:** Switching off the boiler before the fuel burns down to the stable ember level, restarting the operating time by selecting on the panel or by looking into the loading chamber.

7 Troubleshooting

7.1 Boiler overheating

If the water temperature in the boiler **exceeds 95°C** (service parameter), the regulator will shut the boiler down, i.e. turn off the fan.

If the water temperature in the boiler **exceeds 98 °C**, the independent emergency thermostat (STB) will switch off the power to the exhaust fan. The display and other devices remain operational. To put the boiler back into operation, it is necessary to unscrew the cap of the STB emergency thermostat switch on the boiler control unit panel (see Boiler schematic, item 6) and press the STB thermostat button with a thin object. The emergency thermostat cannot be activated until the temperature in the boiler drops below approximately 70 °C.

Link to video – Restart of the STB thermostat after overheating

7.2 Power outage during operation

When the boiler's electrical power is interrupted (e.g., a network outage or main switch off), the exhaust fan stops and the valve on the combustion air supply closes. This will limit the boiler's output as a result. If the boiler is not connected to a backup power source, all connected circulation pumps will also shut down. The hot fuel layer and the lining release heat for approximately 1 hour. To prevent overheating of the boiler, this residual heat must be reliably dissipated – see chapters 5.12.7 and 5.12.8.
The amount of residual heat is approximately 5–10 MJ depending on the current output and the fuel burn-up before shutdown.

7.3 Fault in controlling the amount of oxygen in flue gases

A fault in controlling the amount of oxygen in the flue gases is indicated by a missing or clearly incorrect oxygen value displayed on the screen. The cause may be:

- incorrect oxygen measurement by the lambda sensor
- lambda sensor damage
- damage to the electric drive of the sliding shutter
- damage to the regulator converter

In case of incorrect measurement of oxygen values by the lambda sensor (for an extinguished boiler in fresh air, this value is 21% with an allowable tolerance of ±2%), perform its calibration – see the separate instructions for the boiler regulator.

In other cases, the boiler can be operated in emergency mode, but the air volume setting must be done manually. Beforehand, it is necessary to remove the boiler front cover and manually set the correct position of the air ratio shutter (see Boiler schematic, item 8).

Even under these circumstances, ensure that combustion proceeds as perfectly as possible. Imperfect combustion reduces the efficiency of the boiler and produces excessive amounts of harmful substances (hydrocarbons, especially tar), which pollute the atmosphere and clog the boiler and flue pipes. The quality of combustion is not determined solely by the type and moisture of the fuel, but it can also be significantly influenced by the way we load the fuel and how we regulate the output.

The quality of combustion during emergency operation can be assessed by observing the flame through the sight glass. Good combustion makes the smoke rising from the chimney invisible. A light white smoke that dissipates immediately is not a problem; it is caused by the water vapour produced during combustion.

Do not confuse smoke and steam. Flue gases contain water vapour, which condenses above the chimney and creates a misty haze (similar to gas heaters). Usually, if it is not too humid, the mist will dissipate (evaporate) within a few metres.

The condition for efficient combustion is the correct amount of secondary air.

Excessive secondary air causes an excessive amount of air to not participate in combustion, cools the flame, and carries heat uselessly to the chimney. The flame is sharp, flickering, or not present at all. The ember residues in the combustion chamber, touched by the flame, have a light yellow colour on the edges. **It is necessary to limit the amount of secondary air, i.e. move the shutter to the left**.

Insufficient secondary air causes part of the combustible material not to burn and to exit into the chimney. The flame is long, sometimes it smokes. The ember residues in the combustion chamber, touched by the flame, have the same colour across the entire surface. Smoke rises from the chimney and does not disperse even when the air humidity is lower. **It is necessary to increase the amount of secondary air, i.e. move the shutter to the right**.

Pre-drying air (right half of the shutter range) is intended only for fuel that burns very poorly when set in the middle position of the shutter, e.g. softwood, unsplit logs.

Incorrect use of pre-drying air (with quality fuel) can cause overheating of the walls of the chamber and loading door, leading to their damage.

The amount of secondary air is manually adjusted in emergency mode using the sliding shutter (see Boiler schematic, item 8).

Indicative setting of secondary air according to fuel type:

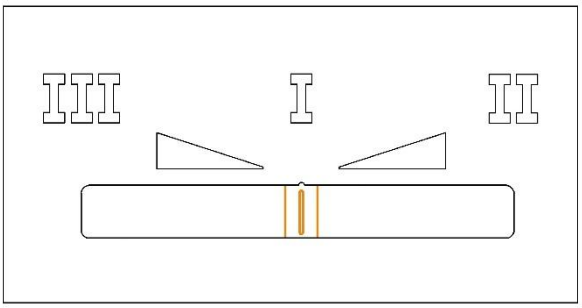

- Common wood – shutter in the middle.

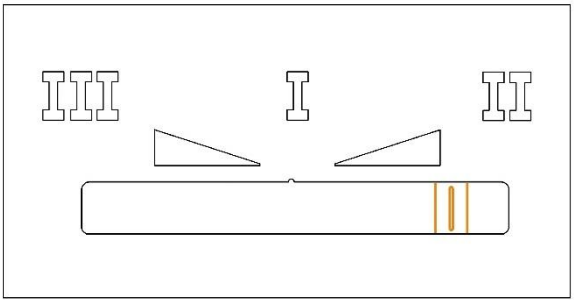

- Hardwood (beech, oak) – larger amount of secondary air – shutter on the right

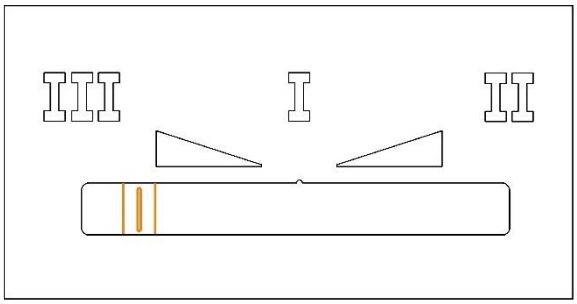

- Soft wood, un-split logs – minimal amount of secondary air (maximum primary and pre-drying air) – shutter on the left

Shutter on the left

7.4 Operation of the boiler without electricity

The boiler is capable of emergency operation using only the chimney draft.

If the boiler installation allows sufficient gravity circulation, it is possible to operate the boiler on chimney draft by removing the front cover, sliding the adjustable shutter to the left, and ensuring the air valves remain permanently open (similar to when checking the functionality of the valves). This prevents the boiler from being

clogged with smouldering unburned fuel during an emergency shutdown, or prevents the building from cooling down excessively.

In the event that you operate the boiler without electricity and the output, or rather the chimney draft, is insufficient, the turbulators can be removed from the boiler's heat exchanger. This will increase the temperature of the flue gases and will also lead to an increase in chimney draft. It is also possible to remove the lower cover of the space under the heat exchanger.

At a chimney draft of 10 Pa, the boiler operates at 30% output; at a draft of 20 Pa, the output is approximately 75%.

The boiler operated in this way must be under constant supervision. It is necessary to ensure (by loading, closing the combustion air openings) that the water temperature in the boiler does not exceed 95 °C.

7.5 Further troubleshooting

Fault	Cause	Removal
The regulator display is not working.	Burnt internal fuse on the control module.	Replace the fuse (service technician, qualified electrician).
	Loose or disconnected data wire connector of the display on the panel or regulator module, damaged wire.	Check the connector, replace the damaged part (service technician, qualified electrician).
	Damaged display.	Replace the display (service technician, qualified electrician).
	Damaged regulator.	Replace the regulator (service technician, qualified electrician).
It is not possible to move the turbulator lever.	Poor combustion, irregular use of turbulators. Frequent boiler shutdowns with larger amounts of fuel (overheating).	Open the door, remove the plug from the heat exchanger. Commercially available products that dissolve tar can be used for release. It is also possible to disassemble the carrier and move the turbulators individually.

The exhaust fan is not rotating in OPERATION mode.	The water temperature is above the desired level. Boiler overheating and disconnection of the emergency thermostat STB. Stuck fan impeller. Burnt fuse of the regulator. Non-functional motor. Damaged regulator.	Change the set value. After the water temperature in the boiler drops below approximately 80 °C, unscrew the cover of the emergency thermostat and press the switch with a suitable object (e.g. a pencil). Remove the cause (foreign body, blockage). Replace the fuse (service technician, qualified electrician). Replace the motor (service technician, qualified electrician). Replace the regulator (service technician, qualified electrician).
There is no stable ember level in the boiler.	Function "Automatic stable ember level" disabled in the regulator settings. Air supply valve leakage (see Boiler schematic, item 18) under the boiler front cover. Damaged induction sensor (red LED does not light up). The detection arm did not deviate due to its immobilisation by a layer of tar. The cause may be frequent boiler shutdowns with a larger amount of fuel (overheating). During the maintenance of the stable ember level, the door was opened (for longer than 10 seconds) and the stable ember level was extinguished.	Activate the "Automatic stable ember level" function in the regulator menu. Check the tightness of the valves with the exhaust fan switched off, and adjust the valves if necessary (service technician). Replace the sensor (service technician). Remove the air distribution panel and rectify the fault. Do not open the door during stable ember level maintenance.
The exhaust fan is making excessive noise.	The impeller is fouled with tar. The cause may be frequent boiler shutdowns with a larger amount of fuel (overheating).	Remove the exhaust fan motor. Clear, remove the cause of clogging.
The exhaust fan runs continuously at full power (IGNITION, REFUELLING mode).	The door sensor is not properly adjusted.	Remove the front cover and check the sensor tightening, or its distance from the protrusion on the loading door handle. Adjust the sensor so that it is as close as possible to the protrusion on the handle.

	The door sensor is damaged.	Replace the door sensor (service technician).
The boiler shuts down during operation with the message "stable ember level".	The detection arm is bent and signals that there is fuel in the boiler. Faulty stable ember layer detection sensor.	Remove the front cover, take off the cap under which the arm counterweight is located. Check the tightening of the arm, and if necessary, whether the arm is mechanically bent. It should be shaped like an "L" (opening the door should lift the counterweight). Replace the stable ember layer detection sensor (service technician).
The boiler is unable to increase output (after closing the loading door, the flue gas temperature drops to low levels).	The boiler has no air supply or the flue gas path is blocked.	Check all 3 air intake valves to ensure they are not stuck. Clean the entire flue gas path (behind the seal and the rear wall of the firebricks in the combustion chamber, check that the turbulators are not blocked, inspect the fan, inspect the flue pipe, inspect the chimney).

Always disconnect the boiler from the mains power supply first when troubleshooting! If the boiler unit also controls a backup heat source, it is essential to disconnect it from the mains power supply as well.

In the interest of maintaining quality function and safe operation, it is necessary for boiler repairs to be carried out **exclusively by personnel from professional service centres**.

Warranty and post-warranty repairs of boilers are provided by BLAZE HARMONY s.r.o. through its **professional service centres and contractual partners**.

8 Burner service and maintenance

The scope and intervals of burner maintenance are described in detail in the "Burner Service Book".

During burner operation, some of the combustion products may pass through the aeration openings into the space between the combustion and aeration chambers. Depending on the fuel quality, it is recommended to clean this space on average every 6 months of burner operation.

8.1 Cleaning the optical sensor

The optical sensor needs to be cleaned regularly with a damp soft cloth. This requires removing the burner cover. Then carefully remove the optical sensor from the burner (1), clean it, and reinstall it back into the burner. Finally, reinstall the burner cover.

Recommended frequency for cleaning the optical sensor: Once a year.

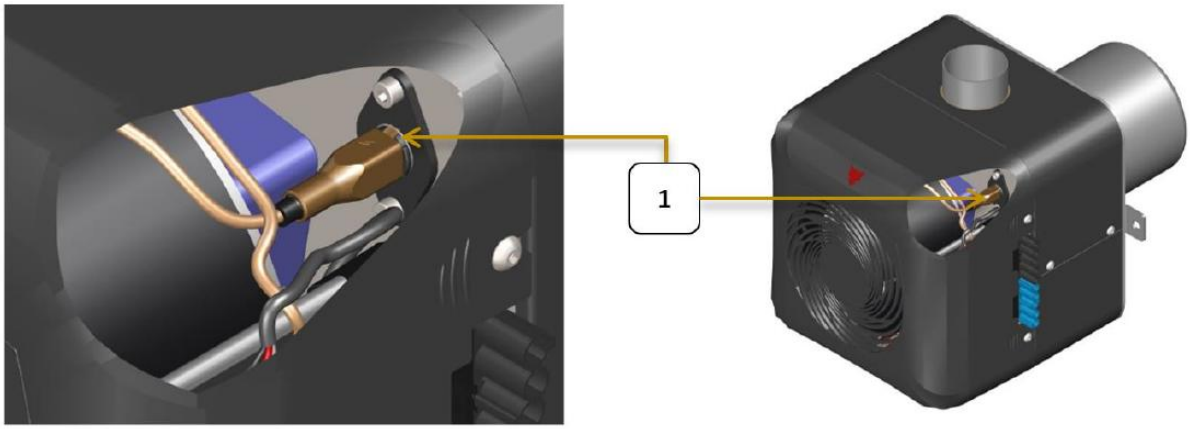

Cleaning of the burner optical sensor

8.2 Ignition coil replacement

If the ignition coil does not heat up in the IGNITION mode, it has likely been damaged. To replace the ignition coil, you have to remove the burner cover. Then disconnect the coil wiring from the terminal block. Unscrew the damaged ignition coil from the metal casing and carefully remove it.

Then install the new ignition coil in reverse order, including the burner cover.

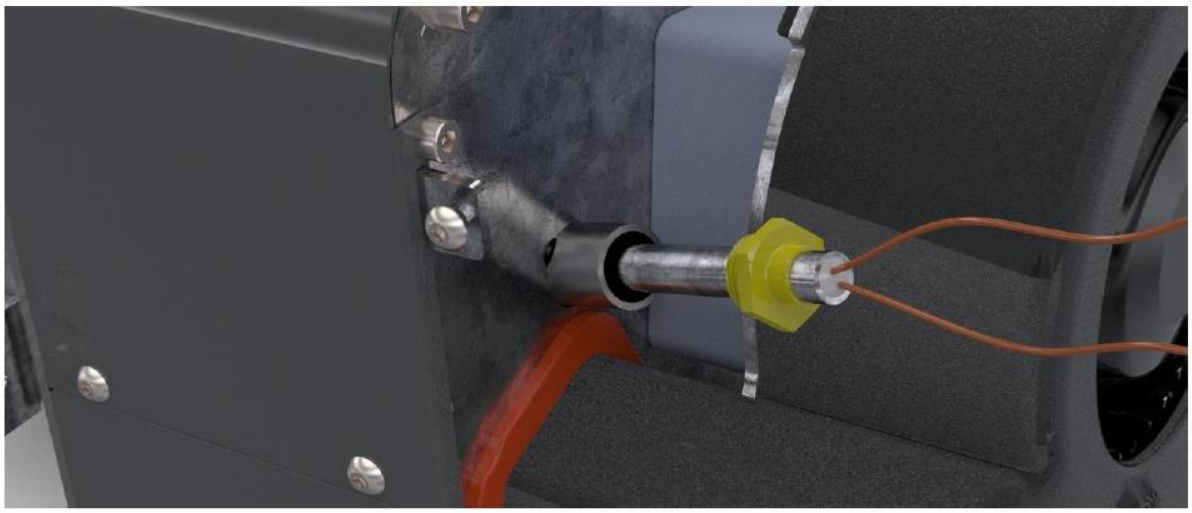

Ignition coil replacement

9 Further information

9.1 Properties of different types of fuels

We do not recommend burning wet wood. Combustion of unseasoned wood reduces its effective calorific value, which is reflected in increased fuel consumption. Moreover, the combustion of wet wood increases the water vapour content in the flue gases, thereby raising their dew point. This may manifest as condensation of moisture and a reduction in the lifespan of the boiler, or possibly the chimney structure. The proper natural drying of wood occurs for softwood in split logs after two years, and for hardwood after three years.

The calorific value of all types of wood is approximately the same, around 15 MJ/kg at 15% moisture content. Hardwood (with a high density) is more suitable if you want to achieve a longer burning time.
Typical density of basic types of wood in kg/m^3 (solid cubic metre) at 15% moisture:

acacia	750	hornbeam	680	alder	520
pine	500	ash	670	spruce	450
birch	630	maple	660	poplar	450
beech	670	linden	490	willow	440
oak	690	larch	590		

The specific weight of wood arranged in woodpiles (stacked cubic metre) is 60–80% of the specific weight of the wood itself (solid cubic metre).

9.2 Fuel consumption, refuelling frequency

The fuel consumption for the season is determined by many factors:

- thermal loss of the building (the output required to heat the building at approximately -15 °C)
- efficiency of boiler operation (fuel quality, operator level and output regulation)
- the location of the boiler room (whether the heat from the surface of the boiler and chimney contributes to heating the building)
- the temperature to which the building is heated (an increase in temperature in the building by 1 °C corresponds to an increase in fuel consumption of approximately 5%)
- if the boiler is used for heating domestic hot water, what is its consumption
- the average outdoor temperature value during the heating period (differences may be ±20%)
- if the entire building is heated or just a part, what is the heat loss due to ventilation, etc.

The typical consumption for a season for a family house with a heat loss of 15 kW is approximately 10,000 kg of dry wood, which is about 30 m3 (stacked cubic metres).

The daily consumption is proportional to the outdoor temperature. An example of the typical representation of daily consumption for a family house with a heat loss of 15 kW during the heating season with the BLAZE PRAKTIK COMBI 25 boiler:

number of days	outdoor temperature	average boiler output	daily fuel consumption	number of loads per day
5 days	-8 °C	55%	75 kg	3x
30 days	-5 °C	45%	60 kg	2-3x
30 days	-2 °C	40%	50 kg	2x
70 days	2 °C	30%	45 kg	2x
50 days	6 °C	20%	40 kg	1-2x
50 days	10 °C	10%	20 kg	1x

9.3 Thermal loss of a building, methods of its determination

- The thermal loss is a parameter defined by a standard. It corresponds to the thermal output required to heat the building to the specified temperature (21 °C for living spaces) at a standardised calculated outdoor temperature. In the Czech Republic, this temperature ranges from -17 °C to -12 °C, depending on the location of the building (lowland, highland).
- The value of thermal loss must be correctly determined based on the parameters of the building (area, wall thickness, wall material, type of windows, outdoor calculation temperature, etc.). Have the calculation performed by the designer or use a publicly available application, for example: https://www.tzb-info.cz/tabulky-a-vypocty/107-vypocet-tepelne-ztraty-objektu-dle-csn-06-021.
- The heat loss can be approximately determined from the built-up area of the building. In a typical non-insulated family house in the temperature zone of the Czech Republic, the heat loss is approximately 40 W per 1m^3, while in an insulated house it is about 20 W per 1m^3.
- The heat loss can also be roughly determined from the consumption of the existing fuel for the season:

Consumption of various types of fuels for a **1kW** thermal loss of the building.

Fuel	Considered overall efficiency	Season consumption
Dry wood	70%	650 kg (1.5 – 2 m^3)
Wood briquettes	70%	600 kg
Wood pellets (automatic boiler)	77%	550 kg
Coal (boiler with manual loading)	70%	600 kg
Coal (automatic boiler)	77%	550 kg
Gas	85%	260 m^3 (2,400 kWh)
Propane	85%	185 kg
Electricity	100%	2,000 kWh
District heating	100%	2,000 kWh (7,200 MJ = 7.2 GJ)

10 Safety instructions

Only devices that have been installed and put into operation according to the documentation, and which are in an appropriate technical condition, may be operated.

When transporting the product to its destination, it is necessary to observe safety regulations. For transportation, use aids and transport devices specifically designed for this purpose with appropriate load capacity (the weight of the product is stated in chapter 2).

The inspection of flue gas paths and chimneys must be carried out in accordance with applicable regulations. The flue pipe must be safely connected to the chimney flue. Flue pipes must be mechanically strong, tight against the penetration of flue gases, and cleanable. The condition of the chimney should be checked regularly. The cleaning opening in the chimney must be properly sealed to prevent smoke blown by the exhaust fan from leaking into the surrounding area. Only one boiler can be connected to a single chimney flue. The connection of the appliance to the chimney flue must always be carried out with the consent of the relevant chimney sweep guild. Flue pipes must not be routed through utility or residential spaces. The internal cross-section of the flue pipe must not be larger than the internal diameter of the flue and must not narrow towards the flue.

Except for approved solid or liquid fire starters, the use of flammable liquids (gasoline, oil, etc.) for lighting fire is prohibited.

Troubleshooting on the boiler can only be carried out on a cooled-down boiler that is disconnected from the electrical network.

Interventions in the boiler and the electrical connections of the boiler are prohibited!

The boiler can only be connected to a suitable 230V/50Hz socket or to a switchboard. After installation, the network socket or switchboard must be accessible without restrictions.

There must be sufficient lighting in the boiler room.

Only a qualified professional may intervene in the electrical part of the boiler.

Installation and operation of the boiler (boiler room) must comply with the relevant project, safety, and hygiene regulations.

The operation of the boilers must follow the installation, assembly, and operation instructions.

The boiler operator must be a person over 18 years old who is familiar with the manual and the operation of the appliance. It is unacceptable to leave children unattended near a boiler that is in operation. The boiler must be under occasional supervision by the operator during operation.

For all activities related to boiler operation, it is necessary to use protective gloves and safety goggles.

Do not place flammable materials near the boiler and the loading and ash removal openings. Ash must be disposed of in non-combustible containers with a lid. Always pay due attention to the fact that the outer surfaces of the boiler may be hot to the touch.

If there is a risk of flammable vapours or gases entering the boiler room or during work that poses a temporary risk of fire or explosion (such as laying floor coverings or painting with flammable paints), the boiler must be taken out of operation in good time before the work begins.

The owner is required to carry out a boiler inspection and safety equipment check at least once a year and verify functionality according to local operating conditions. In the case of connecting the boiler to a dedicated pressure device (e.g. an expansion vessel), the owner is obliged to ensure inspections according to applicable regulations.

WARNING! The boiler may only be used for the purposes for which it is intended.

11 Disposal of transport packaging

- dispose of the polyethylene cover film in a recycling bin for plastics
- disassemble the wooden transport pallet and burn it

12 Disposal of the boiler after the end of its lifespan

- clean the boiler and disassemble it into individual parts
- metal parts to be delivered to a metal waste collection point
- ceramic tiles should be disposed of as household waste or can be used as building material
- insulation boards and sealing cords should be disposed of as household waste

13 Related standards

Heating system

EN 303-5+A1:2023	Heating boilers

Fire regulations

EN 13501-1	Fire classification of construction products and building elements

Electrical

EN 60445 ed. 2	Basic and safety principles for man-machine interface, marking and identification – Identification of equipment terminals and of terminations of certain designated conductors, including general rules for an alphanumeric system
EN 60079-14-2	Electrical apparatus for explosive gas atmospheres – Part 14
EN 60 446	Basic and safety principles for man-machine interface, marking and identification – Identification of conductors by colours or numerals
EN 50 165	Electrical equipment of non-electric appliances for household. Safety requirements
EN 55 014-1	Electromagnetic compatibility – Requirements for household appliances – Part 1
EN 60335-1 ed.2 2003+1:2004+A11:2004+A1:2005+2:2006+A12:2006+a2:2007+ 3:2007+ Z1:2007	Household and similar electrical appliances – Safety – Part 1: General requirements
EN 60335-2-102	Household and similar electrical appliances – Safety – Part 2

14 Warranty conditions

The BLAZE PRAKTIK COMBI boilers are manufactured and tested according to the applicable documentation and comply with EN 303-5+A1:2023 Heating boilers.

The warranty period for the pressure part of the boiler is 84 months.
The warranty period for consumable parts is 12 months.
The warranty period for other components is 24 months.
The warranty period for the pellet burner is 12–36 months (see the Service Book, which forms an integral part of the delivery).
The warranty starts from the date of the first commissioning of the boiler, but no later than 6 months after the date of dispatch of the boiler from the manufacturing plant of BLAZE HARMONY s.r.o.

The warranty applies only to the boiler that is operated according to the instructions provided in the installation, operation, and maintenance manual and started by an authorized company.
Consumable parts are considered to be ceramic tiles, sealing cords, and parts made of heat-resistant steel in the lower combustion chamber.

In the event of the need to replace a defective boiler part under warranty, the end user shall contact the authorised service organisation that commissioned the boiler, or another company in their area with a valid authorisation to commission and service boilers from BLAZE HARMONY s.r.o. The latter will ask the service department of BLAZE HARMONY s.r.o. for a new spare part. If the service department of BLAZE HARMONY s.r.o. considers that the complaint is justified, it will immediately send the spare part in question to the service organisation. The latter will then replace the part on the customer's boiler.

The warranty does not cover, among other things, faults arising from:

- connecting the boiler to a water pressure greater than 300 kPa
- using fuel other than the recommended fuel
- improper operation (e.g. frequent shutdowns and overheating of the boiler)
- connecting the boiler to a network other than 230V/50Hz or to a faulty network
- untreated water (e.g. sedimentary limescale in the boiler)
- inexpert handling and mechanical damage to parts
- incorrectly sized and improperly executed heating system
- violent treatment, intervention in the boiler structure, natural disaster, improper storage or for other reasons not influenced by the manufacturer
- overheating of the boiler and the resulting shutdowns. The warranty becomes void if overheating exceeds 200 hours
  (MENU => Information => Operational counters)

Failure to comply with the above will result in the loss of warranty.
In the event of a warranty claim, please contact the service and installation organisation that put your product into operation.
If the first commissioning of the boiler is carried out by an unauthorised person, the warranty on the product is void!

Immediately send a properly completed and signed document "**Záruční list a Kontrolní list uvedení kotle do provozu a protokol o topné zkoušce**" (Warranty Card and Boiler Commissioning Checklist and Heating Test Report) to the manufacturer after the boiler is put into operation. Without fulfilling this condition, the manufacturer cannot acknowledge the repair as warranty.
When reporting a fault, it is necessary to report:

- the boiler serial number
- the installation date
- the authorised company that put the boiler into operation
- the circumstances of the fault (description of the fault)

The manufacturer reserves the right to make changes as part of product innovation that may not be included in the manual.

15 WARNING!

A properly completed warranty card intended for the manufacturer of the BLAZE PRAKTIK boiler should be sent promptly to the address below:

BLAZE HARMONY s.r.o.

Trnávka 37

751 31 Lipník nad Bečvou

Czech Republic

Or by e-mail to zarucak@blazeharmony.com

16 Record of repairs performed

Record of warranty and post-warranty repairs and product inspections			
Record date	**Performed activity**	**Contractual service organization (signature, stamp)**	**Customer signature**

BLAZE HARMONY s.r.o.

Trnávka 37, 751 31 Lipník nad Bečvou

Czech Republic

E-mail: info@blazeharmony.com, www.blazeharmony.com

Date of last revision: 2026-10-19